MPC-3101/MPC-3121 Series Hardware User Manual

Version 1.0, July 2026

www.moxa.com/products

© 2026 Moxa Inc. All rights reserved.

MPC-3101/MPC-3121 Series Hardware User Manual

The software described in this manual is furnished under a license agreement and may be used only in accordance with the terms of that agreement.

Copyright Notice

© 2026 Moxa Inc. All rights reserved.

Trademarks

The MOXA logo is a registered trademark of Moxa Inc.
All other trademarks or registered marks in this manual belong to their respective manufacturers.

Disclaimer

- Information in this document is subject to change without notice and does not represent a commitment on the part of Moxa.
- Moxa provides this document as is, without warranty of any kind, either expressed or implied, including, but not limited to, its particular purpose. Moxa reserves the right to make improvements and/or changes to this manual, or to the products and/or the programs described in this manual, at any time.
- Information provided in this manual is intended to be accurate and reliable. However, Moxa assumes no responsibility for its use, or for any infringements on the rights of third parties that may result from its use.
- This product might include unintentional technical or typographical errors. Changes are periodically made to the information herein to correct such errors, and these changes are incorporated into new editions of the publication.

Technical Support Contact Information

www.moxa.com/support

Table of Contents

1. Introduction 5
Package Checklist 5
Product Features 5
MPC-3101/MCP-3121 Hardware Specifications 5
2. Hardware Introduction 6
Appearance 6
Dimensions 7
3. Hardware Installation and Connections 8
Hardware Installation 8
Panel Mounting 8
VESA Mounting (optional) 11
Display-Control Buttons 12
Ambient Light Sensor 12
Communication Connections 13
DC Power Input 13
Connecting to the Network 13
Connecting to a Serial Device 13
Connecting to a USB Port 14
Connecting to an Audio Port 14
Digital Inputs/Digital Outputs 14
Installing CFast Storage 15
Installing an M.2 SSD Module 16
Real-time Clock 17
Grounding the MPC-3101 and MPC-3121 17
Powering On/Off the MPC-3101 and MPC-3121 18
4. BIOS Setup 19
Entering the BIOS Setup 19
Main Page 21
Advanced Settings 21
Boot Configuration 22
SATA Configuration 23
CPU Configuration 24
Video Configuration 25
Chipset Configuration 26
Console Redirection 27
SIO ITE8786E 28
NVM Express Information 29
Hardware Monitor 30
Security Settings 31
Current TPM Device 31
TPM State 31
Clear TPM 31
Set Supervisor Password 32
Power Settings 34
Wake on LAN 34
Auto Wake on S5 34
Boot Settings 35
Network Stack 35
PXE Boot capability 35
USB Boot 35
Timeout 36
EFI 36
Exit Settings 37
Exit Saving Changes 37
Save Change Without Exit 37
Exit Discarding Changes 37
Load Optimal Defaults 37
Load Custom Defaults 38

Save Custom Defaults 38
Discard Changes 38
Administering Secure Boot 38
Enabling UEFI Secure Boot 39
Enroll EFI Image 39
Enroll Customer Key 40
Upgrading the BIOS 41
A. Regulatory Approval Statement 46

1. Introduction

The MPC-3101 and MPC-3121 Series Panel PCs with Intel Atom® x6425E quad-core processors deliver a reliable and durable platform of wide versatility for use in industrial environments. All interfaces come with IP66-rated M12 connectors to provide anti-vibration and waterproof connections. With a software-selectable RS-232/422/485 serial port and two Gigabit Ethernet ports, the panel PCs support a wide variety of serial interfaces as well as high-speed IT communications.

Package Checklist

Each model is shipped with the following items:

- 1 MPC-3101/MPC-3121 Series panel PC
- 1 2-pin terminal block for remote power switch
- Panel-mounting kit
- 1 M12 Type A USB cable
- Quick installation guide (printed)
- Warranty card

NOTE

Notify your sales representative if any of the above items are missing or damaged.

Product Features

MPC-3101/MPC-3121 panel PCs come with the following features:

- Panels of various screen sizes
- Intel Atom® x6425E quad-core processor
- -40 to 70°C operation temperature, fanless and without a heater
- 500 / 1000 nit sunlight-readable LCD
- Glove-friendly, multi-touch screen
- EN 50155 compliant
- 24 to 110 VDC power input

MPC-3101/MCP-3121 Hardware Specifications

NOTE

The latest specifications for Moxa's products can be found at https://moxa.com.

2. Hardware Introduction

This chapter introduces the hardware design of the MPC-3101/MPC-3121 Series, including the appearance and dimensions of various models. In addition, we also introduce the peripherals used by the MPC-3101 and MPC-3121 panel PCs to enable easy installation at diverse field sites.

Appearance

MPC-3101

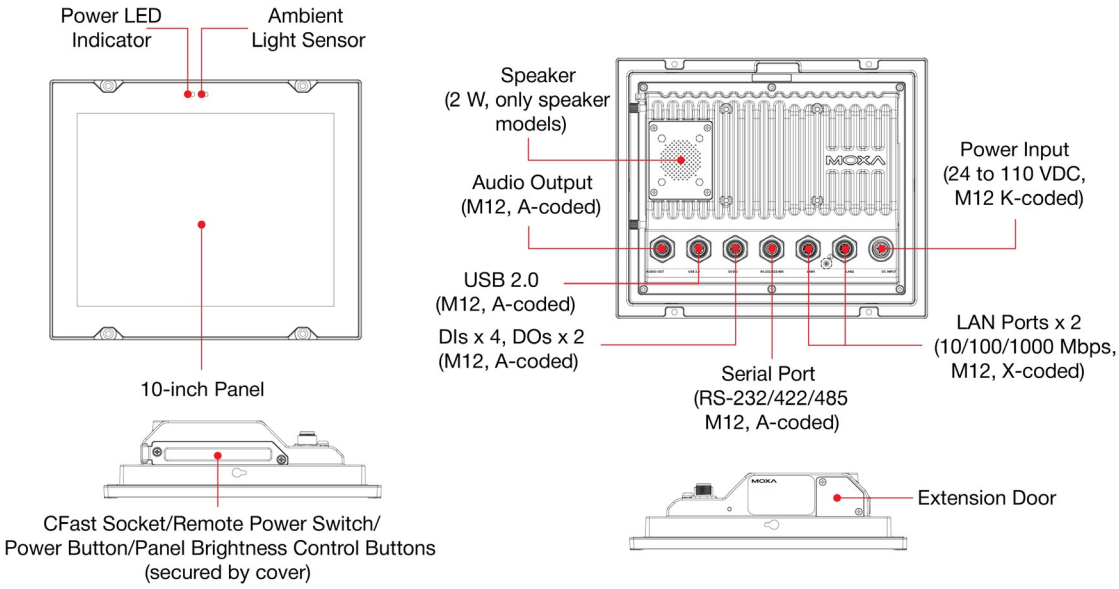

MPC-3121

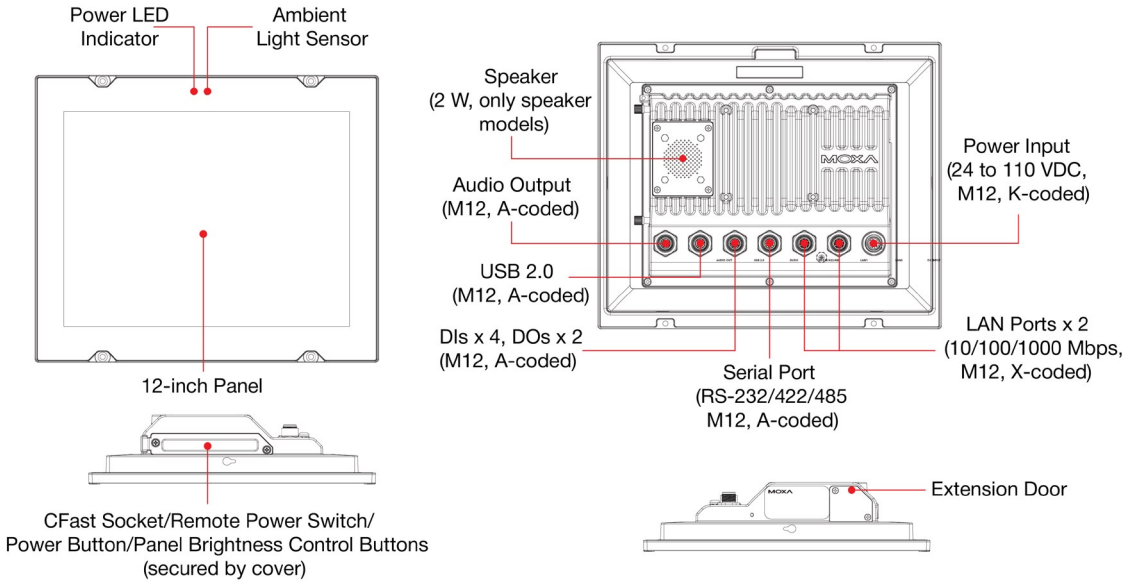

Dimensions

MPC-3101

Unit: mm (inch)

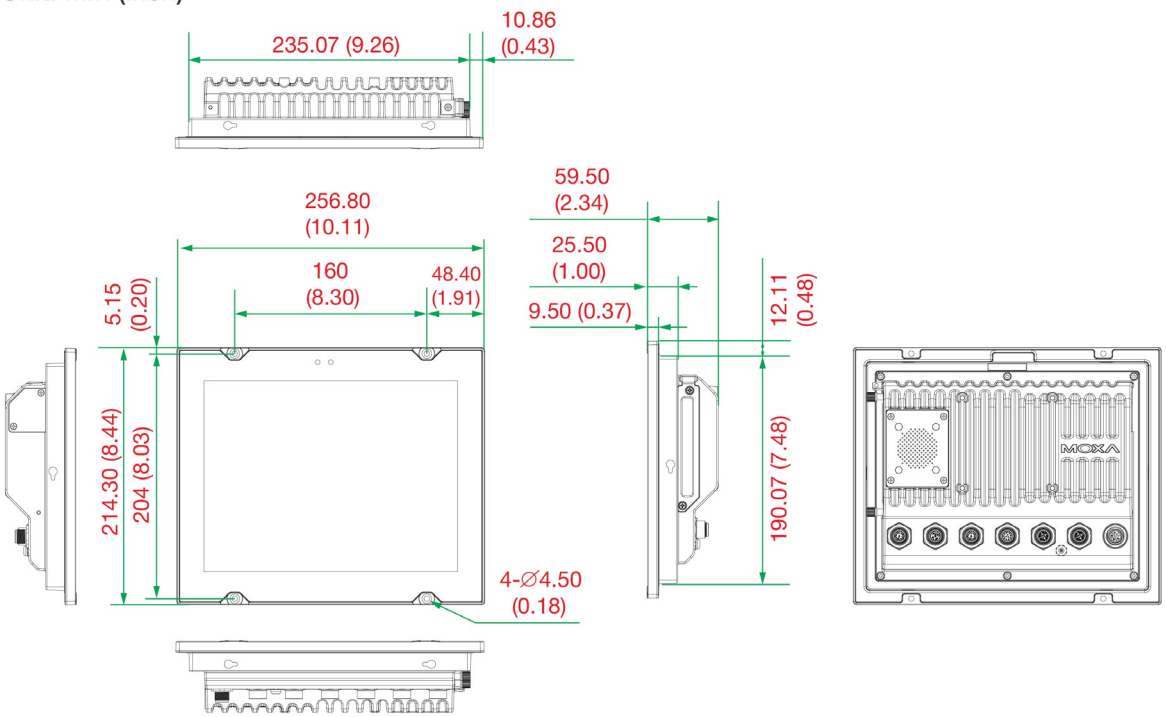

MPC-3121

Unit: mm (inch)

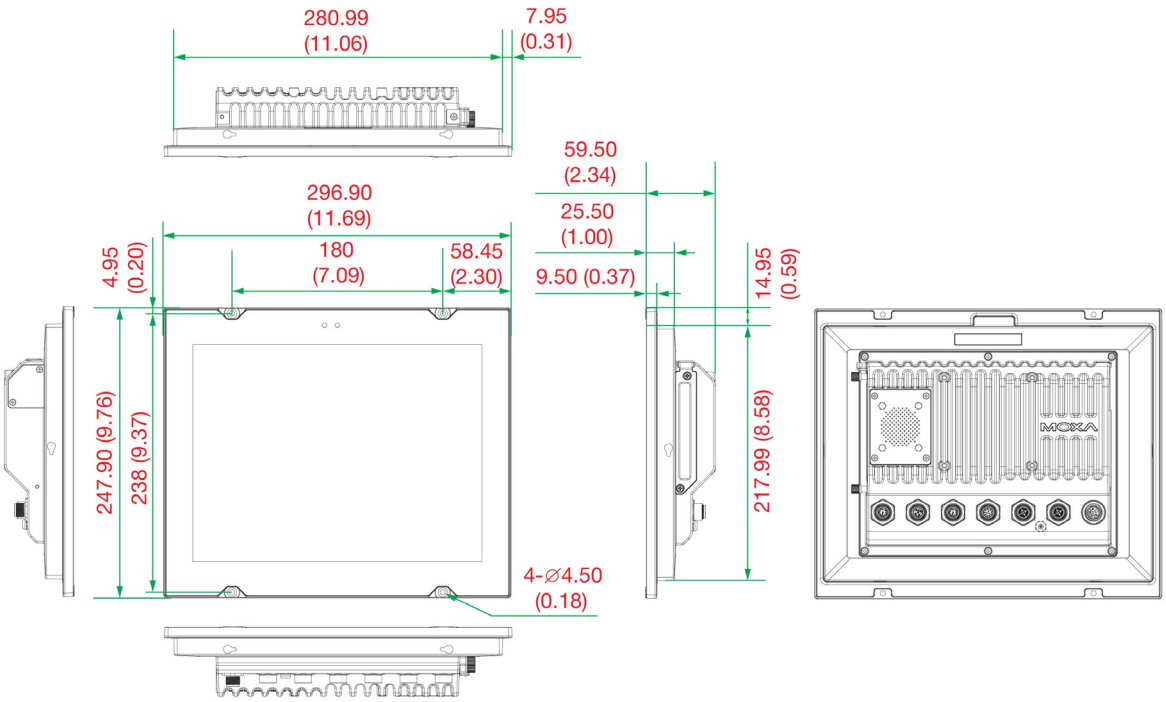

3. Hardware Installation and Connections

In this chapter, we describe how to install the MPC-3101 and MPC-3121 panel PCs and connect them to the network and to various devices.

Hardware Installation

ATTENTION

Ensure only trained staff handle installation, adjustments, and maintenance to avoid damage to equipment.

Panel Mounting

Rear-Panel Mounting

A panel-mounting kit is provided in the product package of the MPC-3101 and MPC-3121 panel PCs. The dimensions and the cabinet space required for panel mounting are shown in the following illustrations.

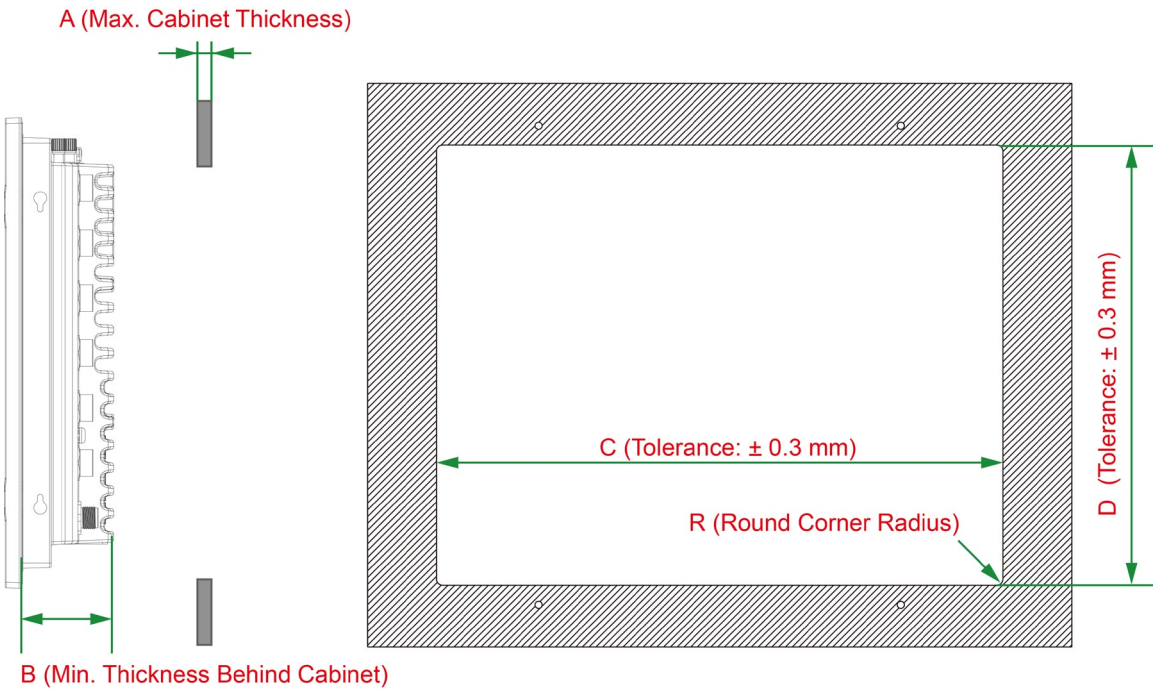

MPC-3101

A (mm)	B (mm)	C (mm)	D (mm)	R (mm)	Mounting Kits (pcs)
5	50	235.87	190.87	3	6

MPC-3121

A (mm)	B (mm)	C (mm)	D (mm)	R (mm)	Mounting Kits (pcs)
5	50	281.59	218.59	3	6

To install the panel-mounting kit on the MPC-3101 and MPC-3121, do the following:

1. Insert the six mounting units into the apertures provided on the rear panel and push to the left to attach them.

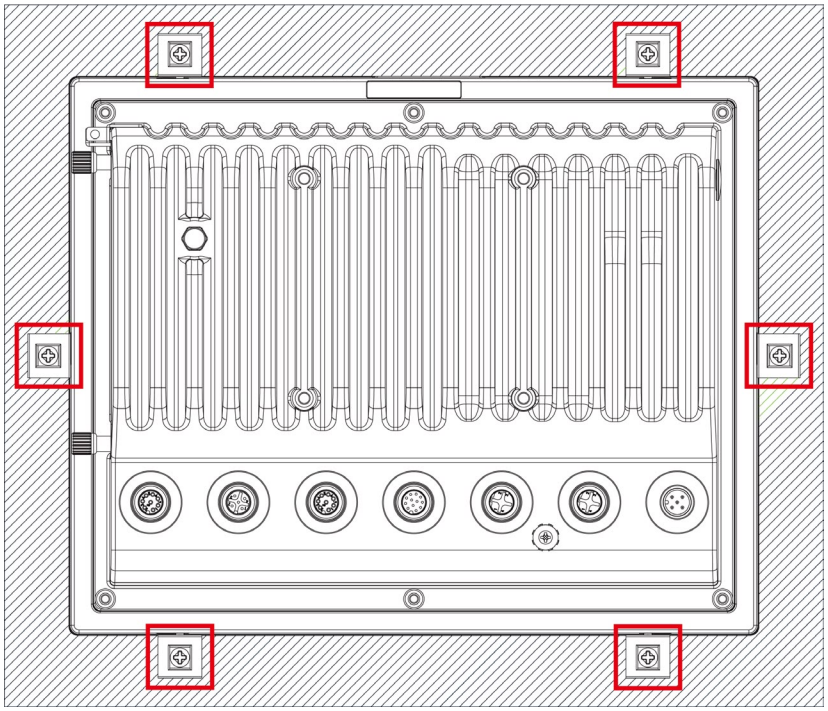

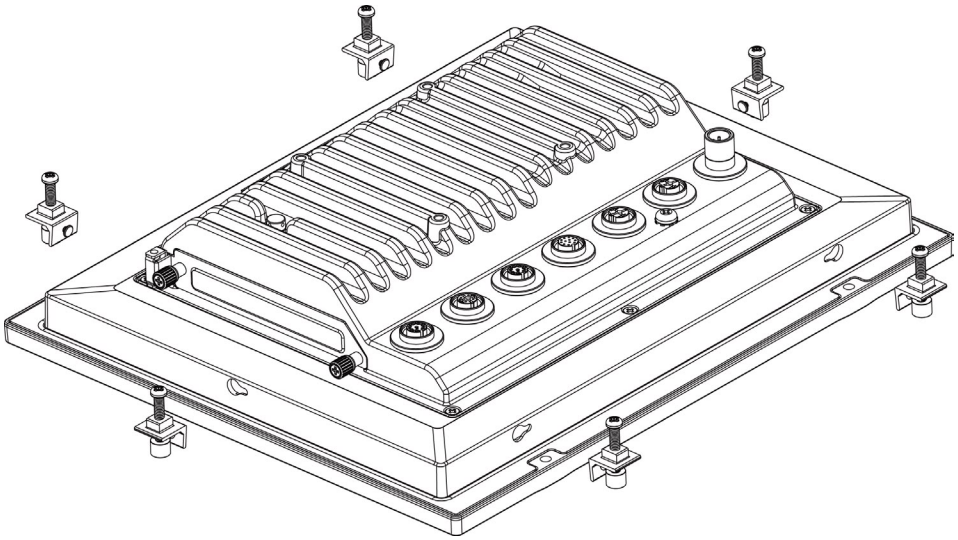

2. Use a torque of 4Kgf-cm to fasten the screws on the mounting units to secure the panel PC to a cabinet.

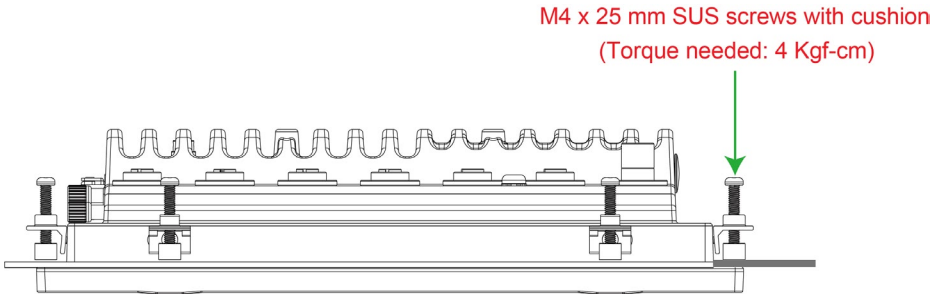

Front-Panel Mounting

The MPC-3101 and MPC-3121 panel PCs can also be mounted using the front panel. Use four screws (M4 x pitch 0.7 mm; not included in the package) to attach the front panel to a cabinet. The location of the screw apertures are shown in the following illustrations:

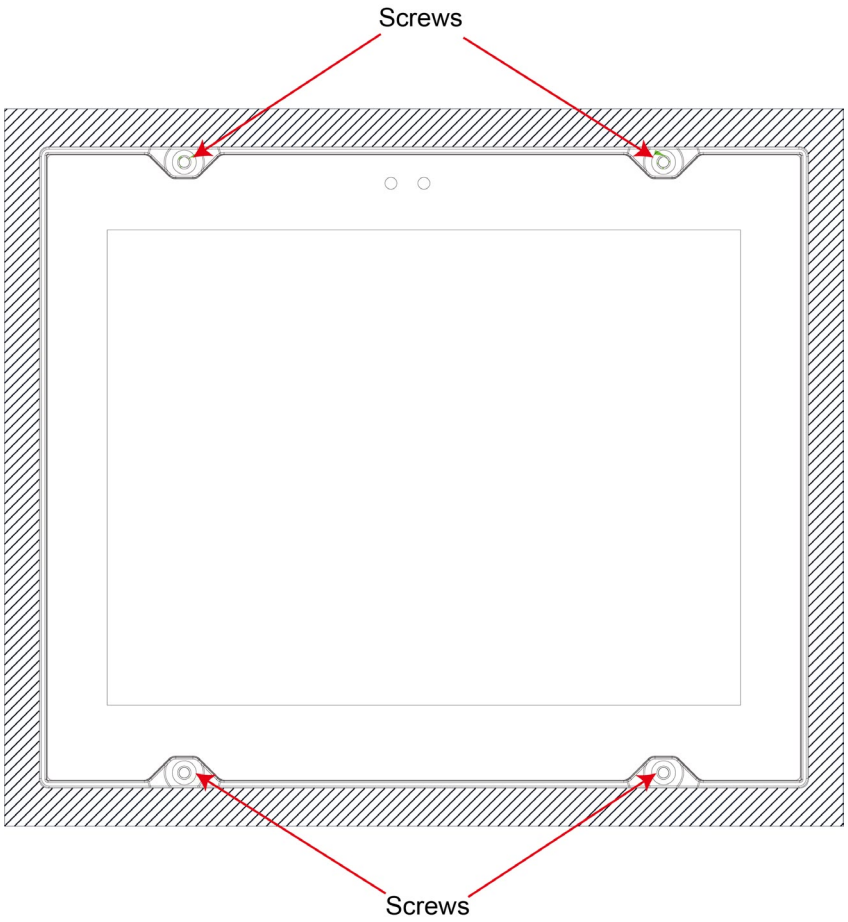

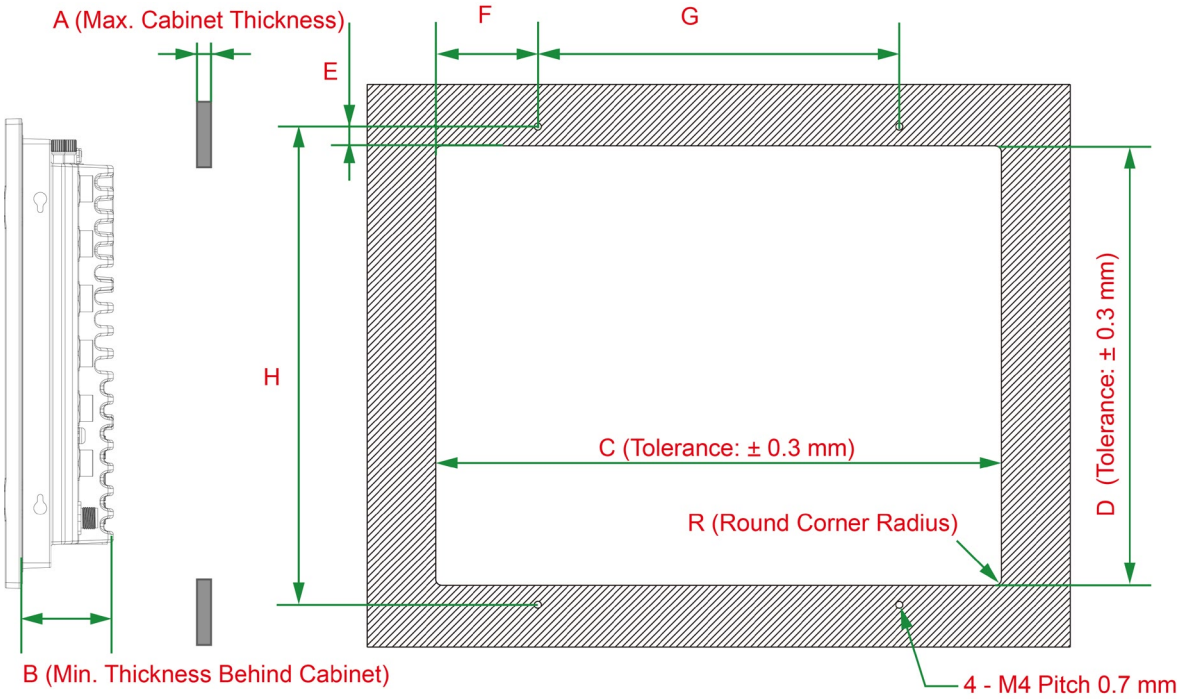

MPC-3101

A (mm)	B (mm)	C (mm)	D (mm)	R (mm)	E (mm)	F (mm)	G (mm)	H (mm)
5	50	235.87	190.87	3	6.57	37.93	160	204

MPC-3121

A (mm)	B (mm)	C (mm)	D (mm)	R (mm)	E (mm)	F (mm)	G (mm)	H (mm)
5	50	281.59	218.59	3	9.71	50.79	179	238

The specifications of the front-panel mounting screws are shown in the following figure.

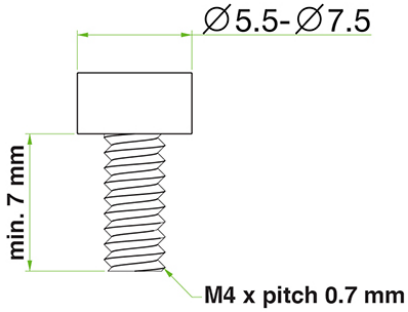

The screws are not included in the package and need to be purchased separately.

VESA Mounting (optional)

The MPC-3101 and MPC-3121 panel PCs are provided with VESA-mounting apertures on the back panel, which you can used directly without the need for adapters. The VESA mounting dimensions are 75 mm x 75 mm. You will require four screws (M4 x 10 mm; not included in the package) to VESA mount the MPC-3101 and MPC-3121.

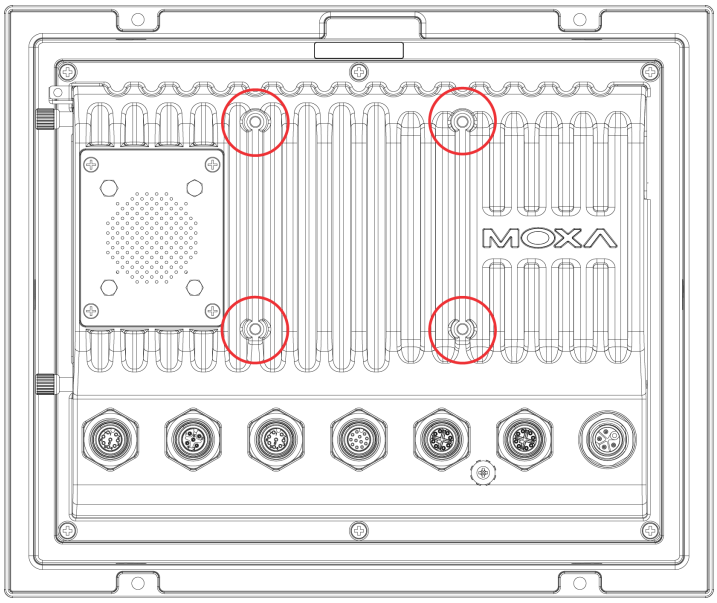

Display-Control Buttons

The MPC-3101 and MPC-3121 panel PCs are provided with two display-control buttons and a power button on the right panel.

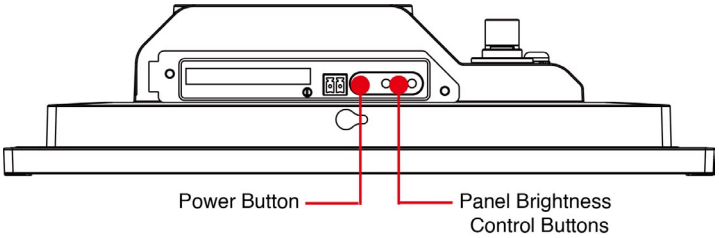

The display-control buttons can be used as described in the following table.

Symbol and Name	Usage	Function
Power	Press	• Power on • Enter sleep or hibernation mode • Wake up **NOTE:** You can modify the function of the Power button in the OS settings menu.
	Press and hold for 4 seconds	Power off
Brightness +	Press	Manually increase the brightness of the panel
Brightness -	Press	Manually decrease the brightness of the panel

Ambient Light Sensor

The MPC-3101 and MPC-3121 panel PCs come with an ambient light sensor located on the upper part of the front panel.

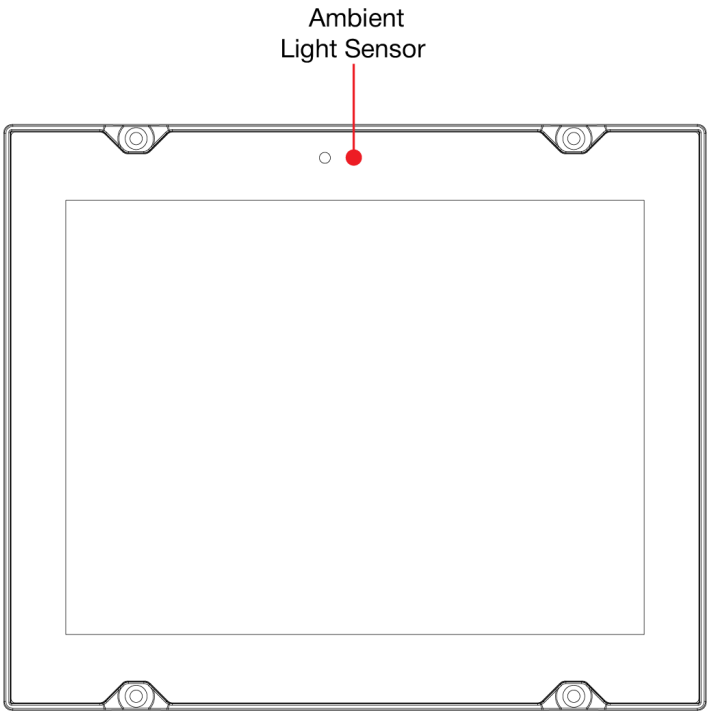

Warning

The MPC-3101 and MPC-3121 Series come with a 1000-nit display. The brightness of the display is adjustable up to level 10 and it is optimized for use in the -40 to 70°C temperature range. However, if you are operating the MPC-3121 at an ambient temperature of 60°C or higher, we recommend setting the brightness level of the display to 8 or lower to extend the lifetime of the display.

Communication Connections

DC Power Input

The MPC-3101 and MPC-3121 panel PCs can be powered through the DC power input with M12 connector. The DC pin assignments are as follows:

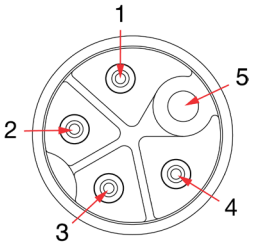

Pin	Definition
1	V+
2	V-
3	V-
4	N/A
5	PE

Connecting to the Network

The MPC-3101 and MPC-3121 panel PCs come with two Ethernet 10/100/1000 Mbps ports with M12 connectors. The pin assignments are as follows:

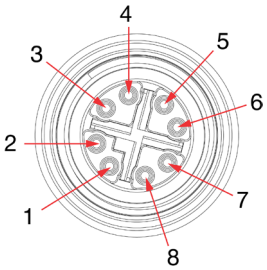

Pin	10/100/1000 Mbps
1	DA+
2	DA-
3	DB+
4	DB-
5	DD+
6	DD-
7	DC-
8	DC+

Connecting to a Serial Device

The MPC-3101 AND MPC-3121 offers two software-selectable RS-232/422/485 serial ports over a DB9 connector. The pin assignments for the ports are shown in the following table:

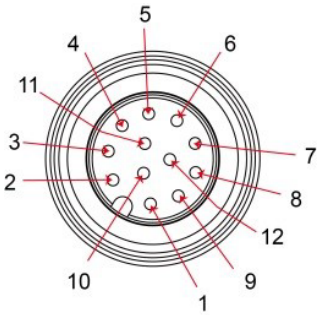

Pin	RS-232	RS-422	RS-485
1	RI	–	–
2	RXD	TX+	–
3	DTR	RX-	D-
4	DSR	–	–
5	CTS	–	–
6	DCD	TX-	–
7	TXD	RX+	D+
8	RTS	–	–

Connecting to a USB Port

The MPC-3101 and MPC-3121 panel PCs come with one USB 2.0 port with an M12 connector on the rear panel. Use this port to connect a mass-storage drive or other peripheral devices. The pin assignments are as follows:

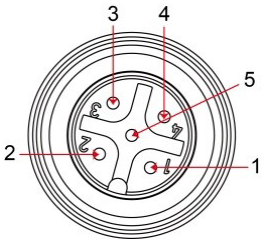

Pin	Definition
1	D-
2	VCC
3	–
4	D+
5	GND

Connecting to an Audio Port

The MPC-3101 and MPC-3121 panel PCs come with an audio output port with an M12 connector. The pin assignments are as follows:

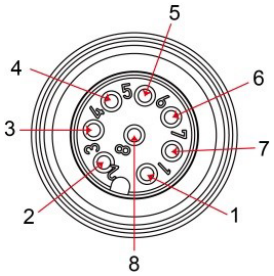

Pin	Definition
1	Detect
2	Line out, L
3	Line out, R
4	GND
5	Speaker out-
6	Speaker out+
7	GND
8	GND

Digital Inputs/Digital Outputs

The MPC-3101 and MPC-3121 panel PCs come with one DIO interface, which has a 8-pin M12 connector and includes 4 DIs and 2 DOs. The pin diagrams and wiring instructions are as follows:

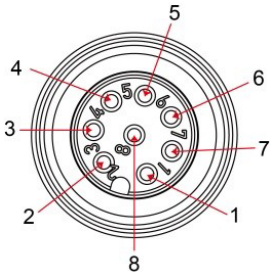

Pin	Definition
1	COM
2	DI_0
3	DI_1
4	DI_2
5	DI_3
6	DO_0
7	GND
8	DO_1

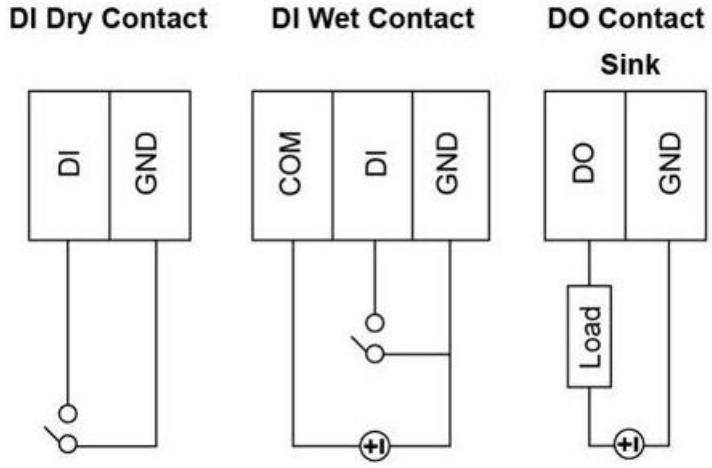

Installing CFast Storage

The MPC-3101 and MPC-3121 panel PCs provide a CFast card socket located on the left panel. To install a CFast storage device, do the following:

1. Unfasten the two screws on the storage cover and open the cover.

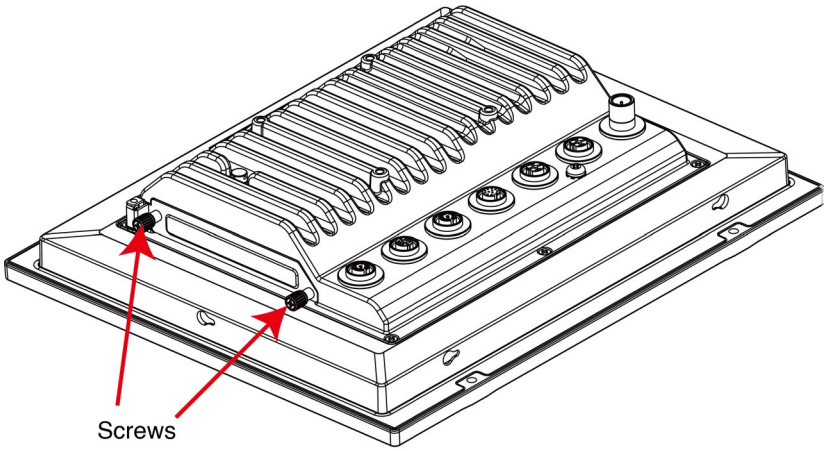

The CFast card socket is shown here:

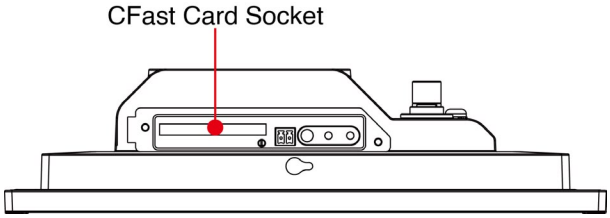

2. Insert a CFast card into the socket using the push-push mechanism.
3. Close the storage cover and fasten the screws to secure it.

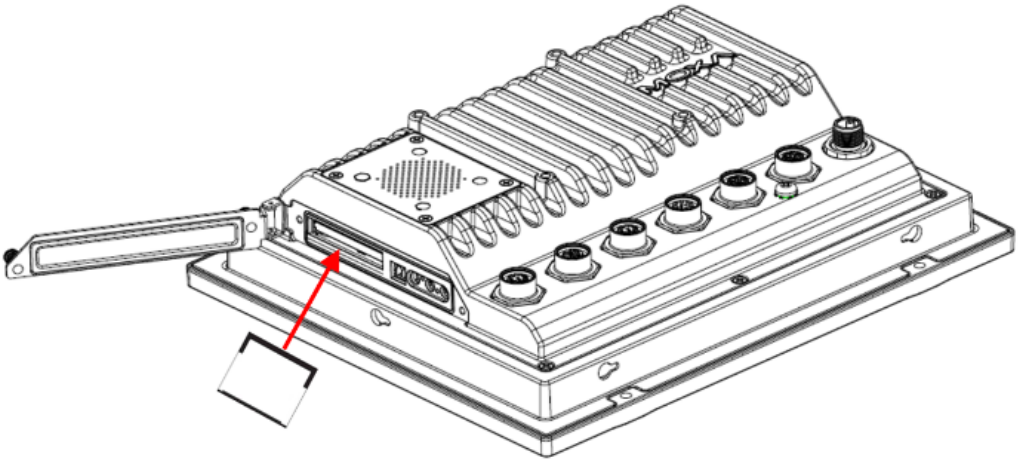

Installing an M.2 SSD Module

The MPC-3101 and MPC-3121 panel PCs provide an M.2 2242 (M-key) socket for storage expansion. To install or replace the M.2 module, do the following:

1. Unfasten the 6 screws on the back cover and remove the cover to access the M.2 socket.

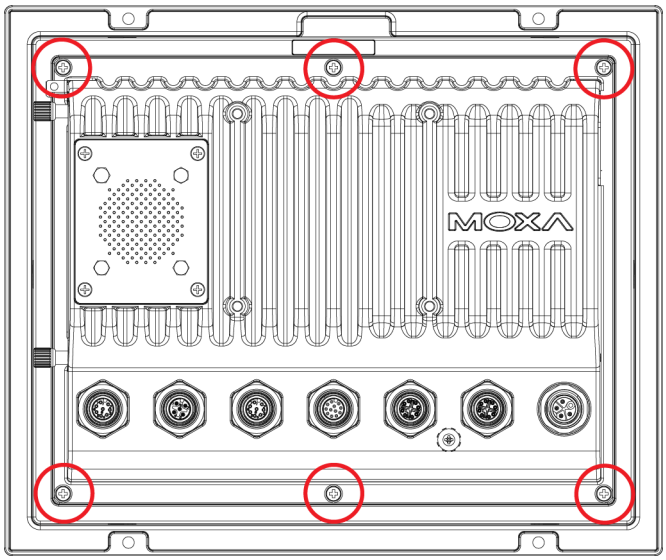

The location of the M.2 socket is marked in the following picture:

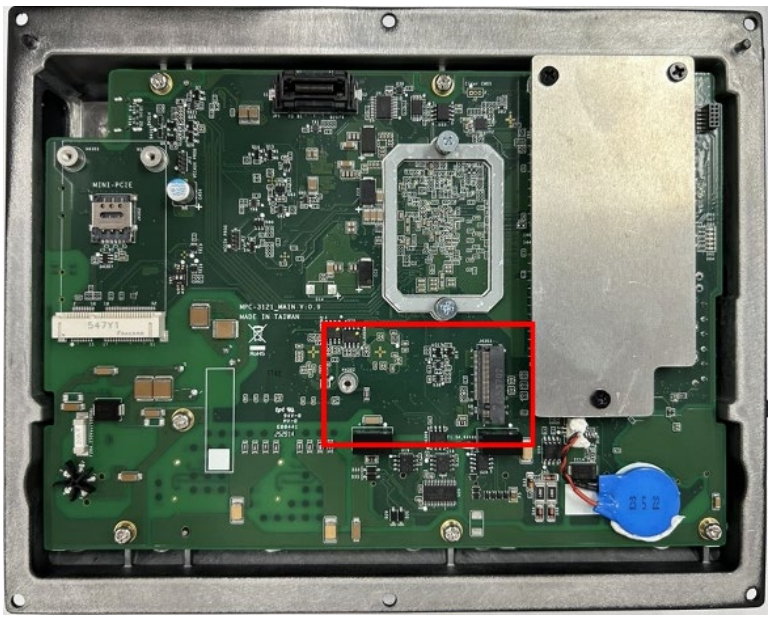

2. Install the M.2 module in the socket and fasten the screw to secure the module to the socket.
3. Replace the cover and secure it by fastening the six external screws using a torque of 6 kgf-cm.

NOTE

To maintain the IP66 rating of rear cover (applicable to models without an embedded speaker), ensure that the gasket and sealing surfaces are clean and free of dust before attaching the rear cover. Using a calibrated torque screwdriver to tighten the screws onto the rear cover with a torque of 6 kgf-cm to ensure a secure seal.

Real-time Clock

The real-time clock (RTC) is powered by a lithium battery. We strongly recommend that you do not replace the lithium battery without help from a qualified Moxa support engineer. If you need to change the battery, contact the Moxa RMA service team. The contact details are available at: http://www.moxa.com/rma/about_rma.aspx.

ATTENTION

There is a risk of explosion if the clock's lithium battery is replaced with an incompatible battery. Dispose of used batteries according to the Instructions.

Grounding the MPC-3101 and MPC-3121

Proper grounding and wire routing help to limit the effects of noise from electromagnetic interference (EMI). Run the ground connection from the ground screw to the grounding surface prior to connecting the power source.

The minimum cross-sectional area required for the protective earthing conductor is 3.31 mm². A mandatory external bonding facility with a cross-sectional area of at least 4 mm² must be installed for effective conductivity.

The grounding screw (M6 x P1.0, length 10 mm) comes fixed to the device. The recommended torque value for the screw is 5 kgf-cm.

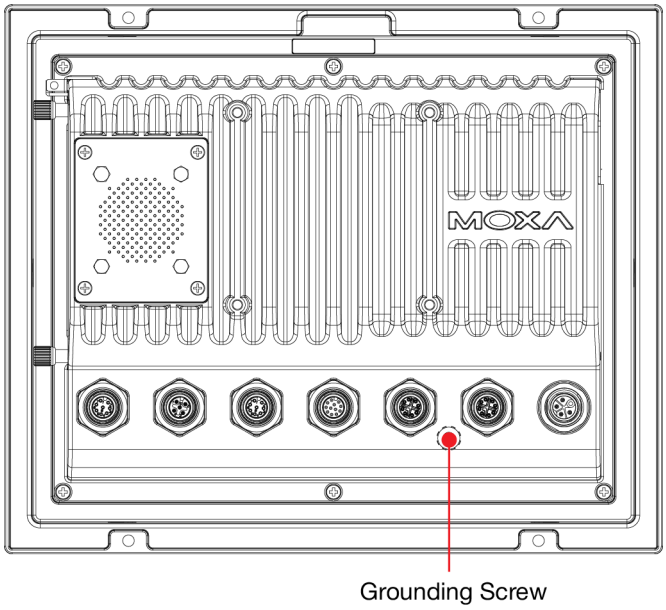

ATTENTION

To ground this product to the earth ground, use a green and yellow grounding cable with AWG 18 or higher.

Powering On/Off the MPC-3101 and MPC-3121

Connect an M12 connector to power jack converter (not included in the package) to the M12 connector on the MPC-3101 and then connect a 50 W power adapter to the converter. Supply power through the power adapter. After you have connected a power source, the system power turns on automatically. It takes about 10 to 30 seconds for the system to boot up. You can change the power-on behavior of your panel PC by changing the BIOS settings.

To power off the MPC-3101 and MPC-3121, we recommend using the shut-down function provided by the OS. If you use the power button, you will enter one of the following states depending on the power management settings in the OS: standby, hibernation, or system shutdown mode. If you encounter problems, press and hold the power button for 4 seconds to force a hard shutdown of the system.

WARNING

The 2-pin remote power terminal block is not for use in hazardous locations.

ATTENTION

This equipment is intended to be supplied by an external power source, which is evaluated according to UL/EN/IEC 62368-1 or UL/IEC 60950-1. The power source shall comply with LPS/PS2, the output rating is 24 VDC, minimum 1.82 A or 110 VDC, minimum 0.35 A, at an ambient temperature of 70°C max.

4. BIOS Setup

In this chapter, we describe the BIOS settings for the MPC-3101 and MPC-3121 panel PC. The BIOS is a set of input/output control routines for peripherals to initialize the basic settings. The BIOS helps boot the system before the operating system is loaded. The BIOS setup allows the user to modify the system configuration for basic input/output peripherals. All the configurations are stored in the CMOS RAM, which has a backup battery in case the panel PC is not connected to a power source. Consequently, the data stored in the CMOS RAM is retained when the system is rebooted, or the power is disconnected.

Entering the BIOS Setup

To enter the BIOS setup utility, press the F2 key while the system is booting up. The main BIOS Setup screen will appear. You can configure the following settings on this screen.

- **Continue:** Continue to boot up
- **Boot Manager:** Select the device for boot up
- **Device Management:** Enter the device configuration menu
- **Boot From File:** Select the UEFI boot up file
- **Administer Secure Boot:** Enter the Secure Boot menu
- **Setup Utility:** Enter the BIOS configuration menu

Select **F2** to enter the **BIOS configuration**.

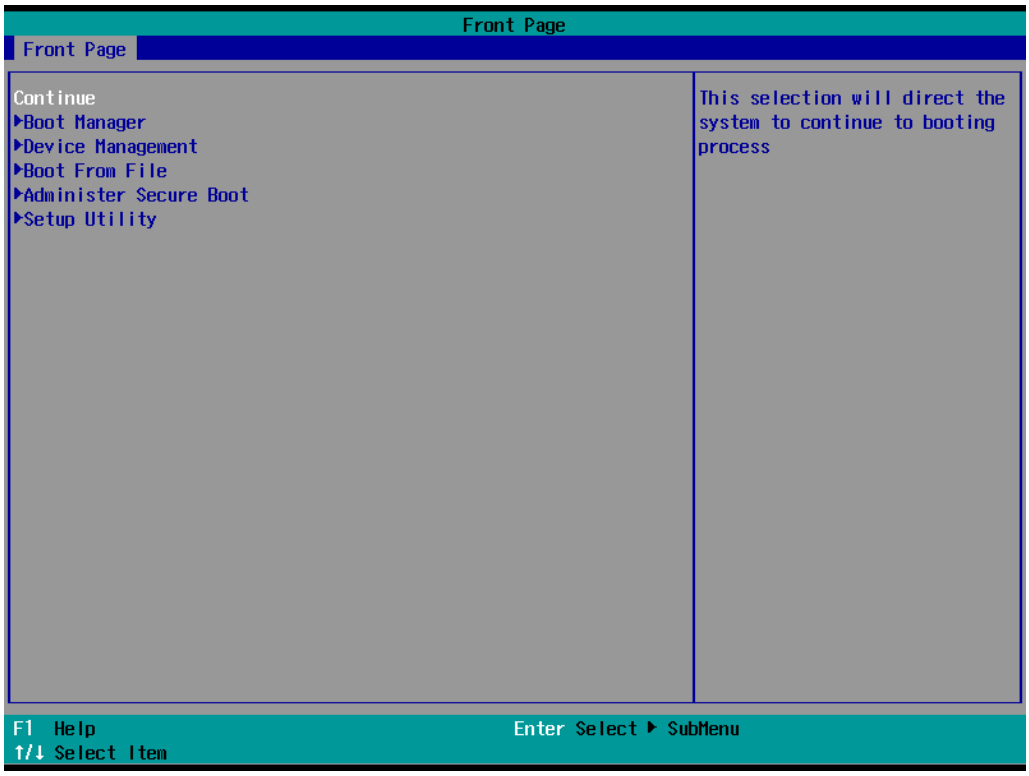

When you enter the **Setup Utility**, a basic description of each function key is listed at the bottom of the screen. Refer to these descriptions to learn how to use them.

F1	**General Help**	**↑ ↓ .**	**Select Item**
F5/ F6	**Change Values**	**←→**	**Select Menu**
F9	**Setup Defaults**	**ESC**	**Exit**
F10	**Save and Exit**	**EN TER**	**Select or go to Submenu.**

The BIOS configuration screen will be shown when you enter the **Setup Utility** option.

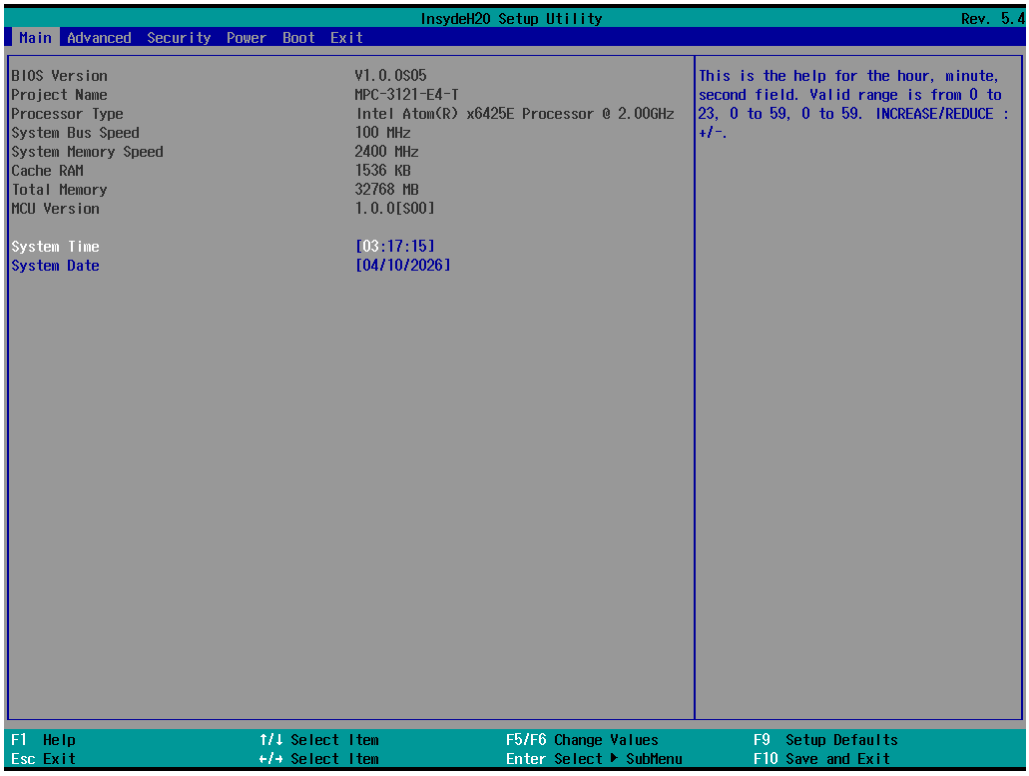

NOTE

The **Processor Type** information may vary depending on the model that you have purchased.

Main Page

The **Main** page displays basic hardware information, such as model name, BIOS version, and CPU type.

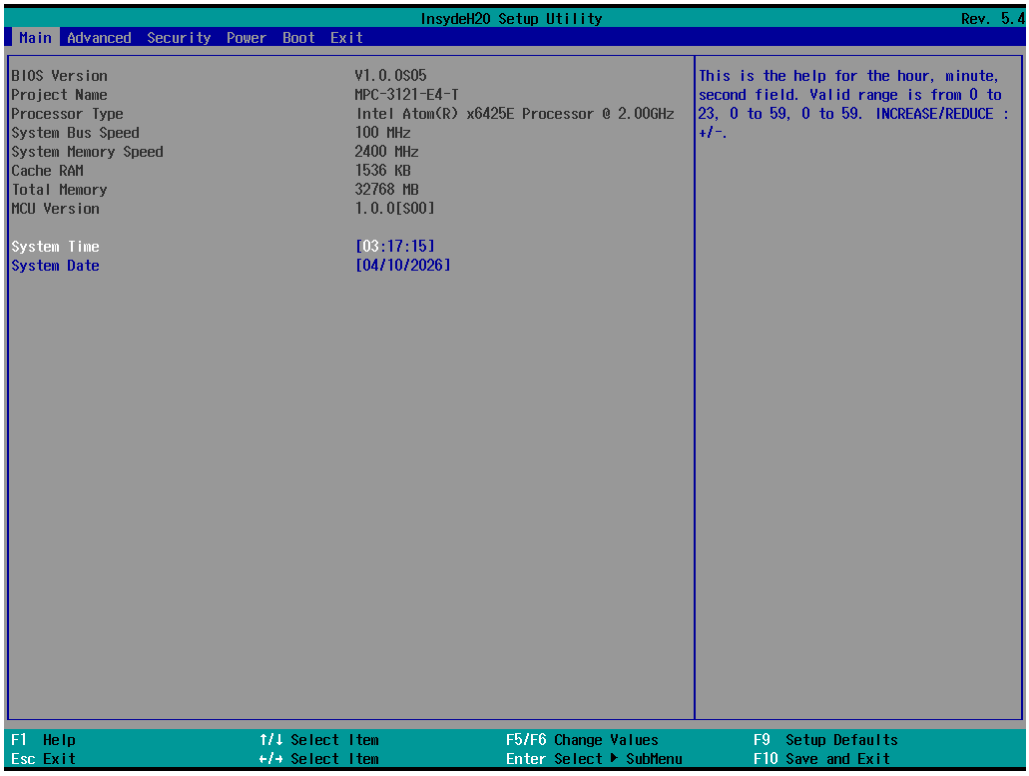

Advanced Settings

Select the **Advanced** tab in the main menu to open the advanced features screen.

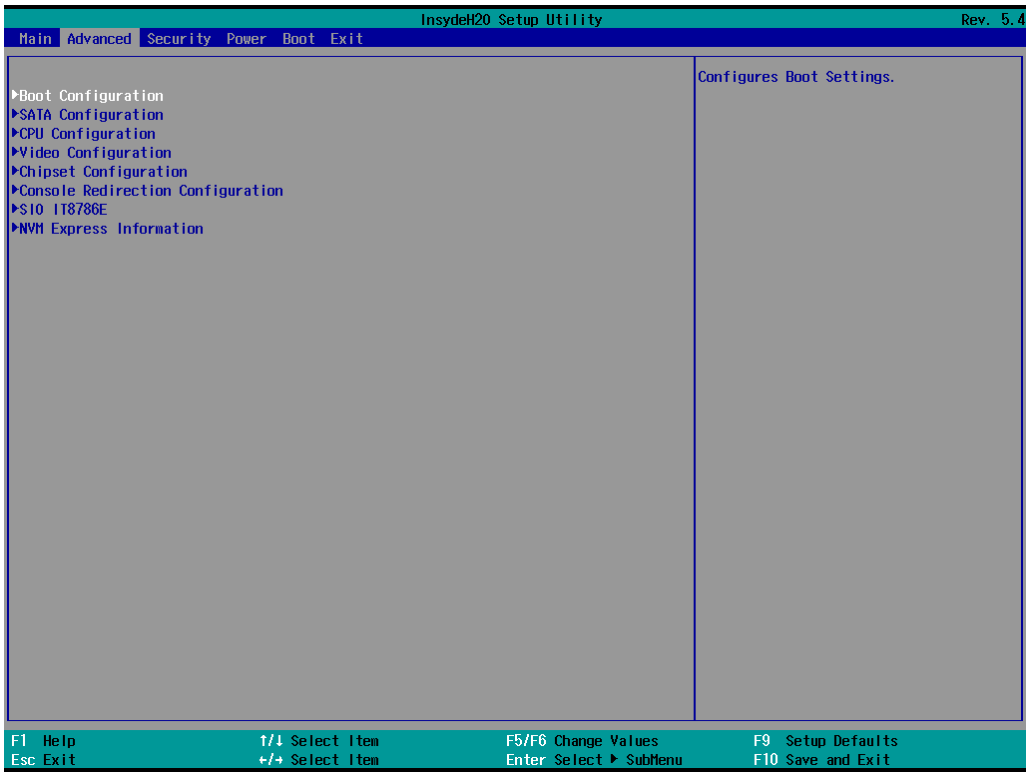

Boot Configuration

The **Numlock** option allows configuration of the Numlock value

Options: On (default), Off.

SATA Configuration

This section allows you to select the SATA speed limit and hot plug setting.

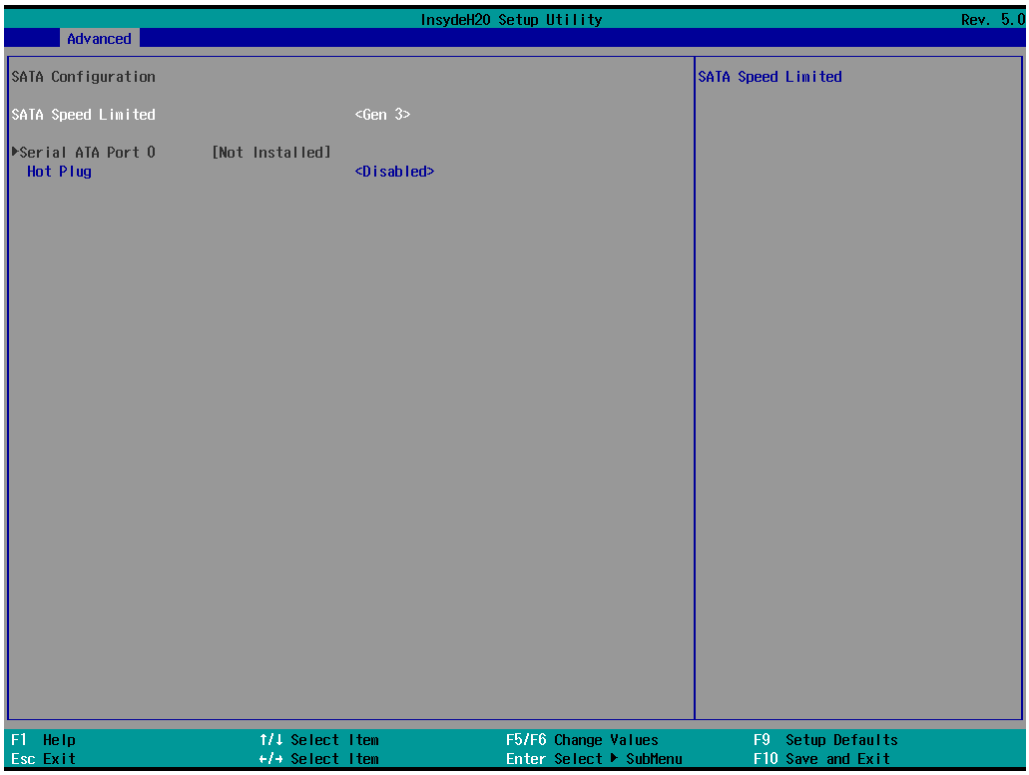

SATA Speed Limited

Options: Gen 1, Gen 2, Gen 3 (default)

Serial ATA Port

This setting displays information on the installed drives.

SATA Port Hot Plug

This setting allows you to enable/disable hot-plugging capabilities (the ability to remove the drive while the panel PC is running) that are configured by software for installed storage drives.

Options: Disabled (default), Enabled

CPU Configuration

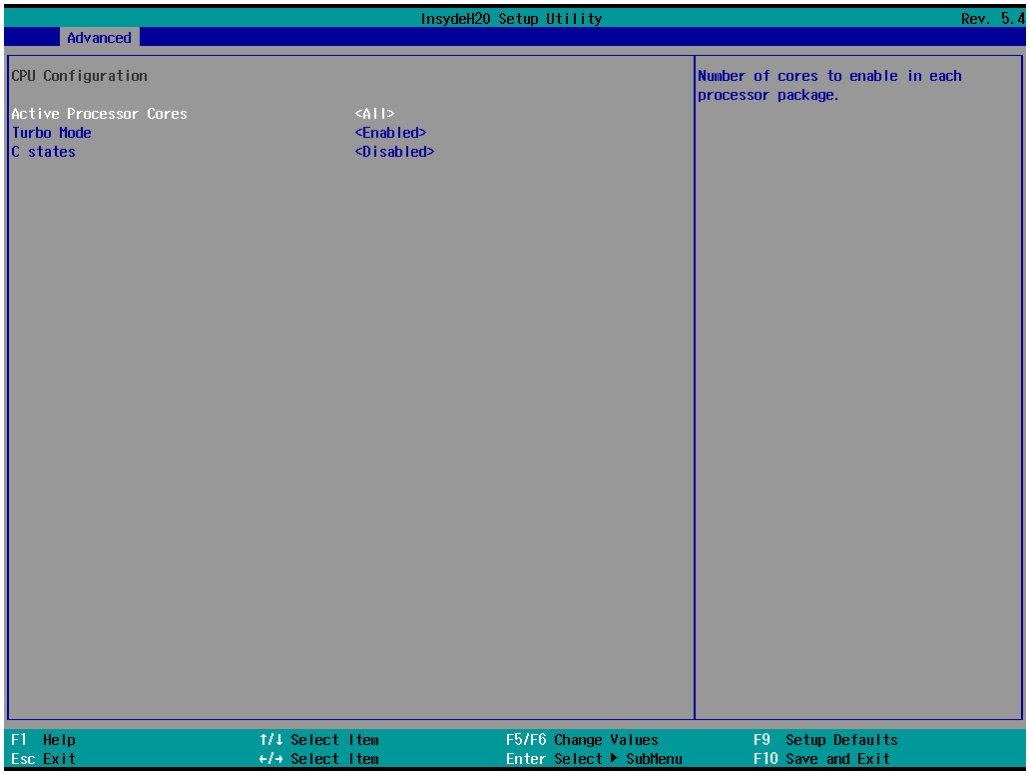

Active Processor Cores

This item indicates the number of cores to enable in each processor package (Cores number depended on the processor).

Options: All (default), 1, 2, 3

Turbo Mode

Enable/Disable processor Turbo Mode (not supported in models with Intel® Celeron®).

Options: Disabled, Enabled (default)

C State

Enable/Disable CPU C state function.

Options: Disabled (default), Enabled

Video Configuration

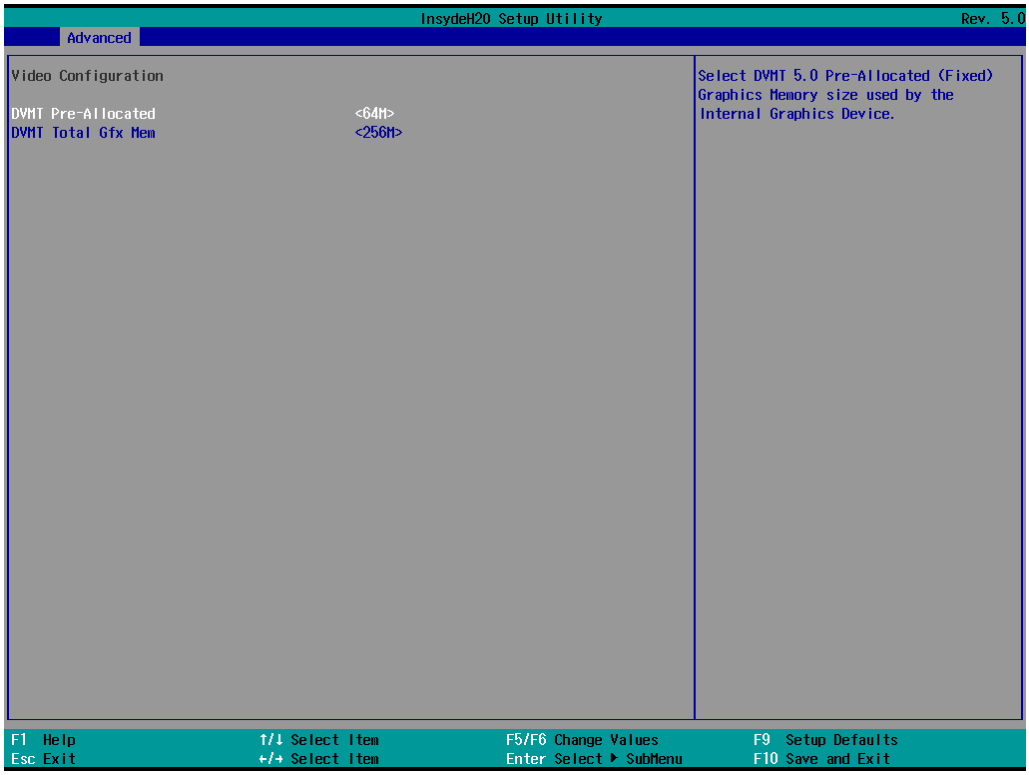

DVMT Pre-Allocated

This item allows you to configure pre-allocated memory capacity for the IGD. Pre-allocated graphics memory is invisible to the operating system.

Options: 64M (default), 96M, 128M, 160M

DVMT: The amount of video memory your panel PC has depends on the amount of pre-allocated memory set for your system plus the Dynamic Video Memory Technology (DVMT). DVMT dynamically allocates system memory for use as video memory creating the most efficient use of available resources for maximum 2D/3D graphics performance.

DVMT Total Gfx Mem.

This item allows you to configure the maximum amount of memory DVMT will use when allocating additional memory for the internal graphics device.

Options: 256 MB (default), 128 MB, Max.

Chipset Configuration

This section allows you to configure the chipset settings.

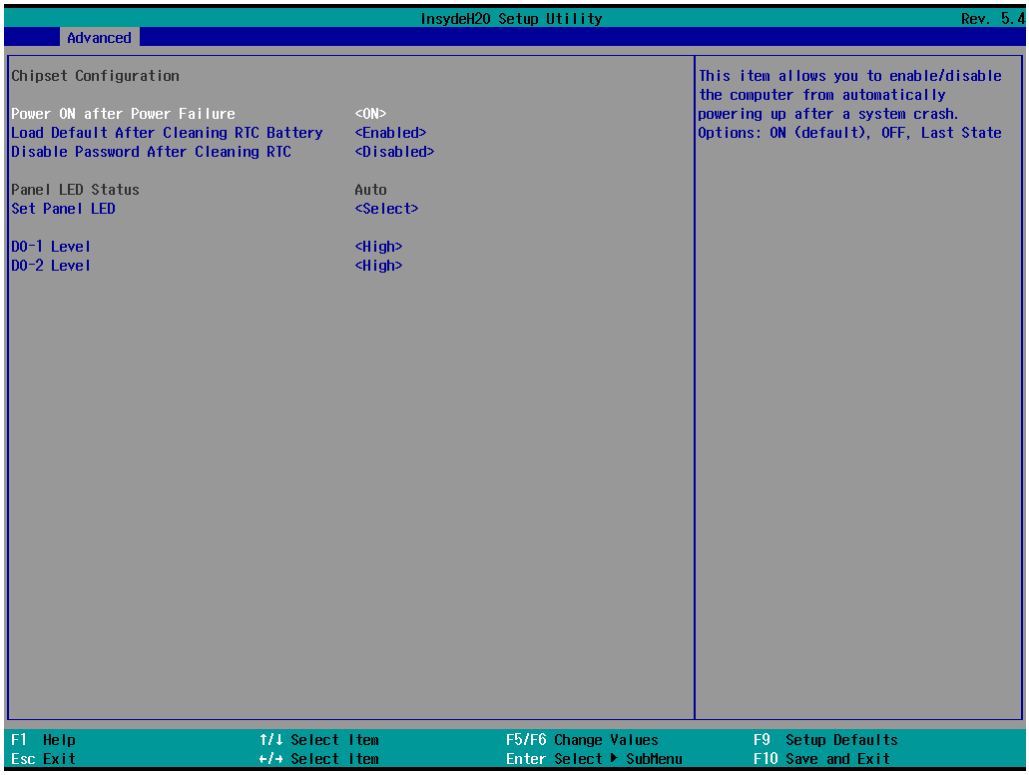

Power ON after Power Failure

This item allows you to enable/disable the panel PC from automatically powering up after system power is re-enabled.

Options: ON (default), OFF, Last State

Load Default After Cleaning RTC Battery

System will load default when detecting RTC battery loss.

Options: Disabled, Enabled (default)

Disable Password After Cleaning RTC

This item allows you to enable/disable the function that clears the BIOS password after an RTC (Real-Time Clock) reset occurs, such as when the RTC battery is removed.

Options: Disabled (default), Enabled

Set Panel LED

This item provides options to configure the behavior of the LED indicator on the front panel.

Options: Auto (default), ON, OFF

DO-X Level

This item allows users to set the DO to high or low.

Options: High (default), Low

Console Redirection

This section allows you to configure the console redirection settings.

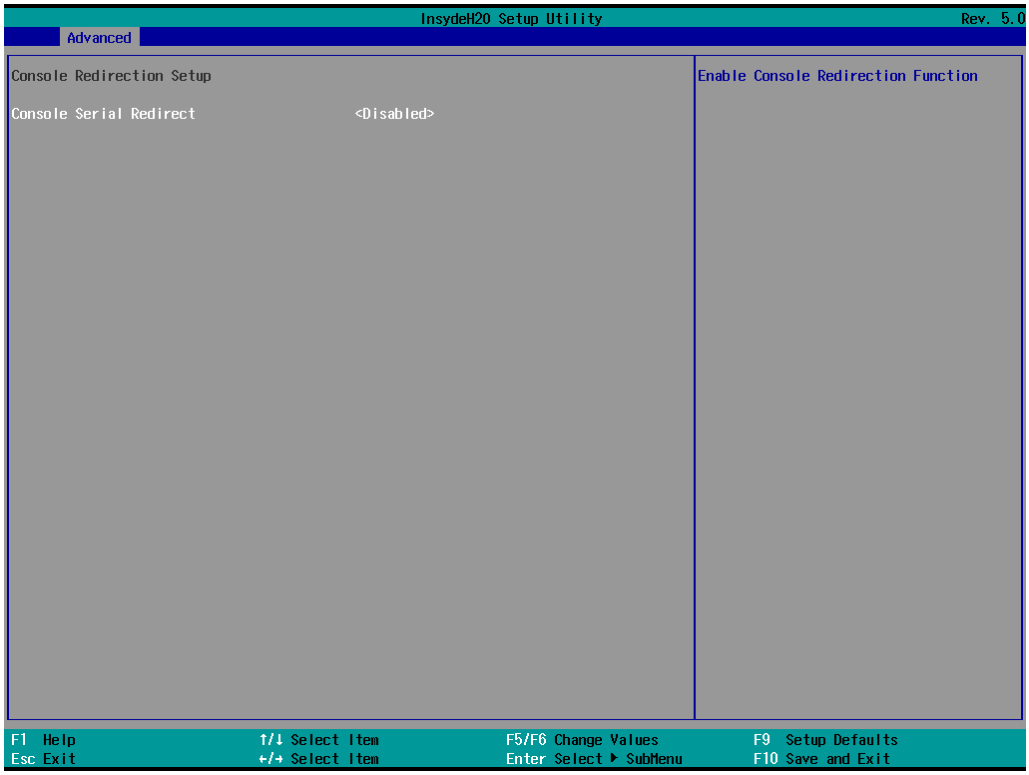

Console Serial Redirect

When the Console Redirection Function is enabled, the console information will be sent both to the display monitor and the serial port (COM1).

Options: Disabled (default), Enabled

SIO ITE8786E

This section allows users to configure SIO settings.

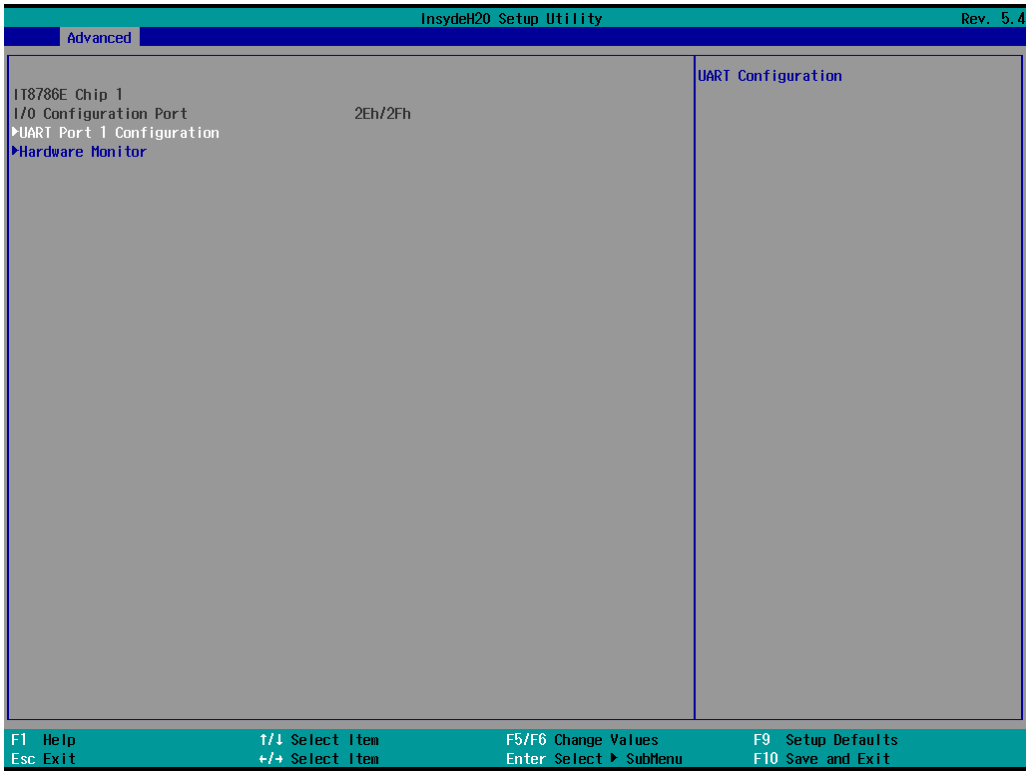

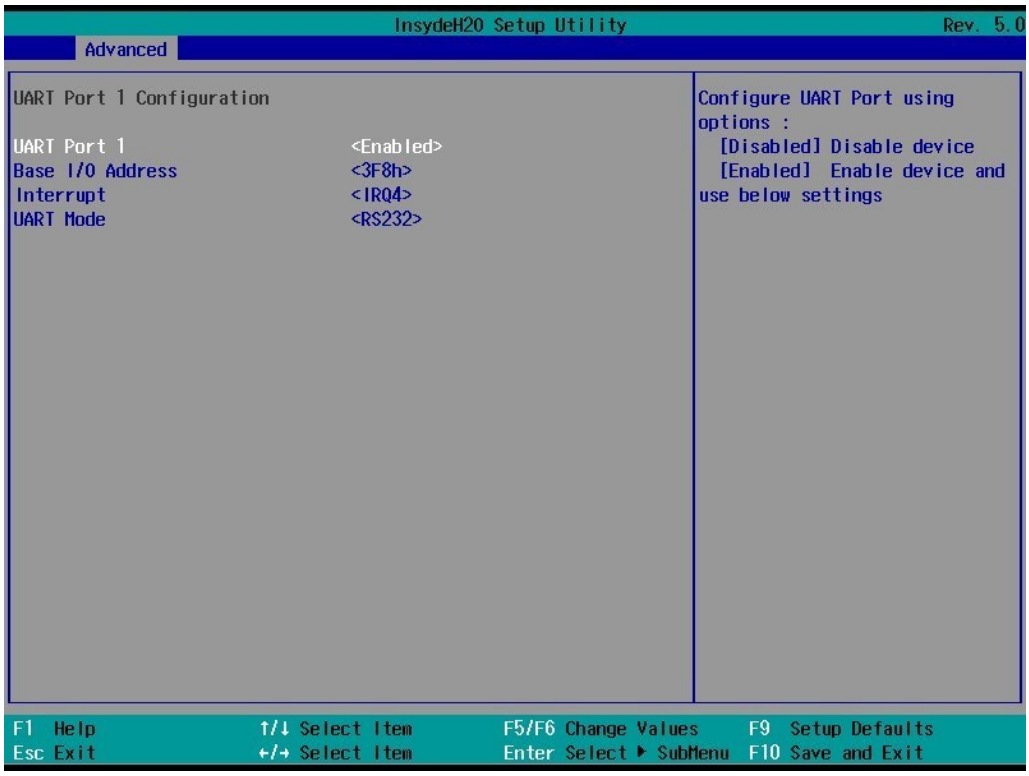

UART Port 1

This function allows users to configure the resources for the UART port 1.

Disable: Disable the UART port 1 connection

Enable: Enable the UART port 1 connection (default)

NOTE

The UART port can only be configured by an OS utility.

NVM Express Information

This page displays the installed NVMe model information.

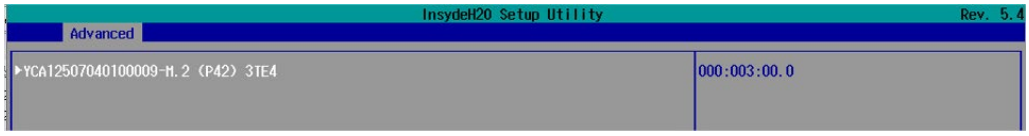

Select the detected NVMe device to view detailed information.

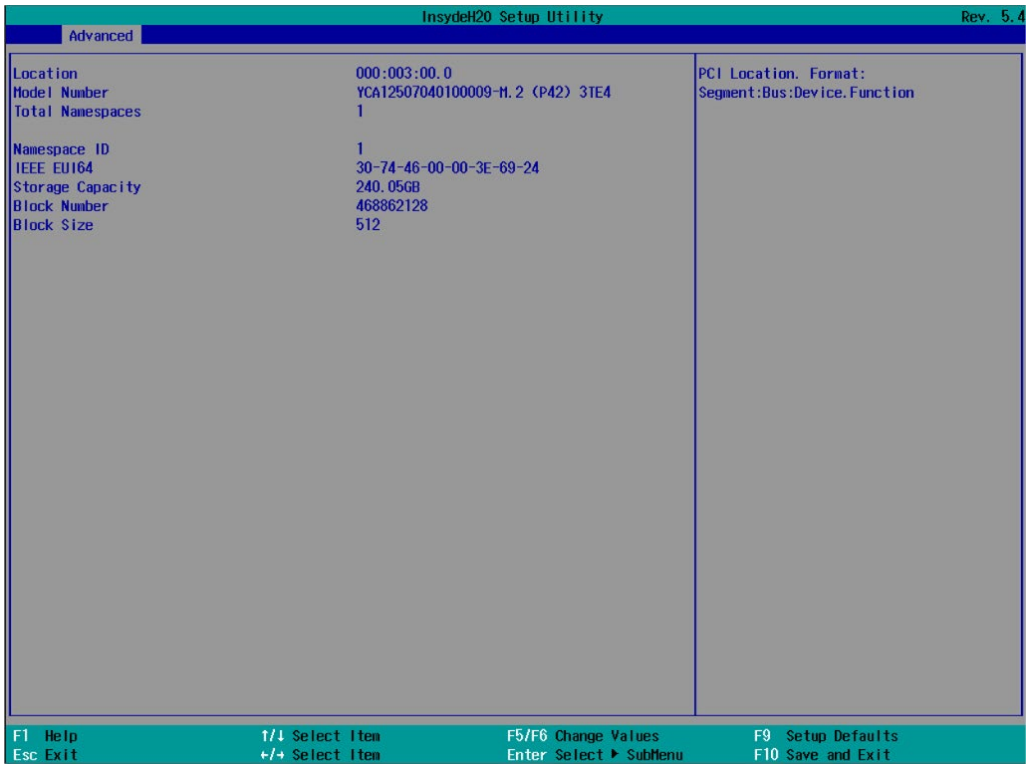

Hardware Monitor

This section allows you to view stats such as CPU and system temperature, voltage levels, and other chipset information.

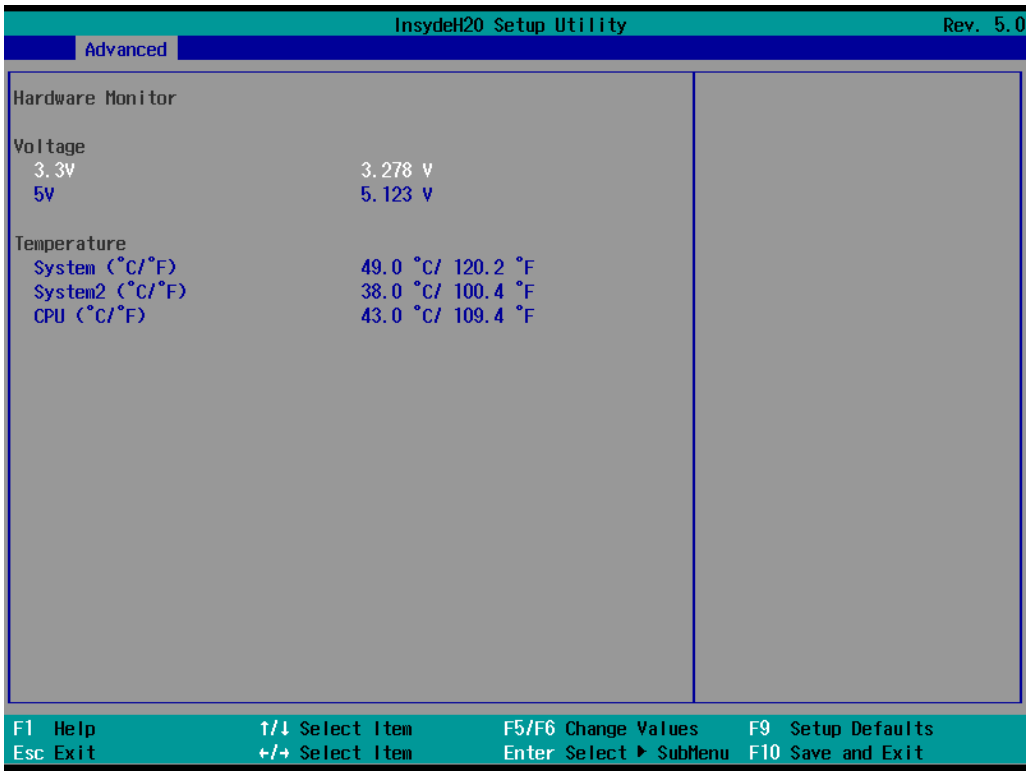

Security Settings

This section allows users to configure security-related settings with a supervisor password.

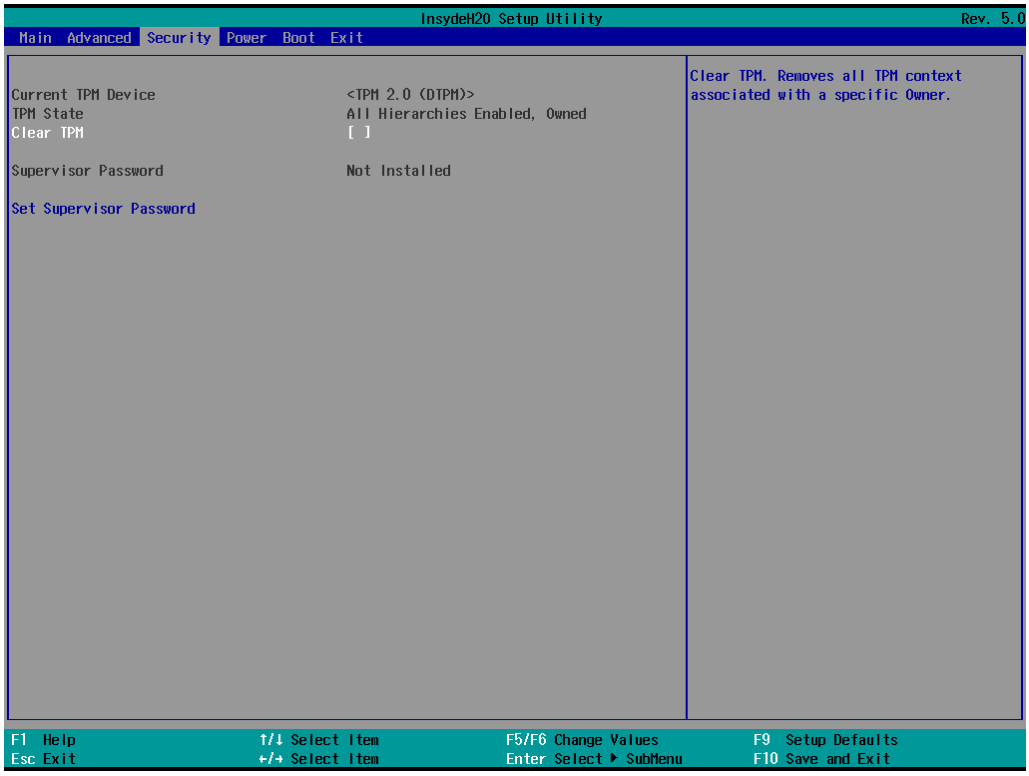

Current TPM Device

This item shows if the system has TMP device and its type.

TPM State

This item allows you view the status of current TPM settings.

Clear TPM

This item allows users to remove all TPM context associated with a specific owner.

Set Supervisor Password

This item allows you to set the supervisor password. Select the **Set Supervisor Password** option and enter the password and confirm the password again.

To delete the password, select the **Set Supervisor Password** option and enter the old password; leave the new password fields blank, and then press enter.

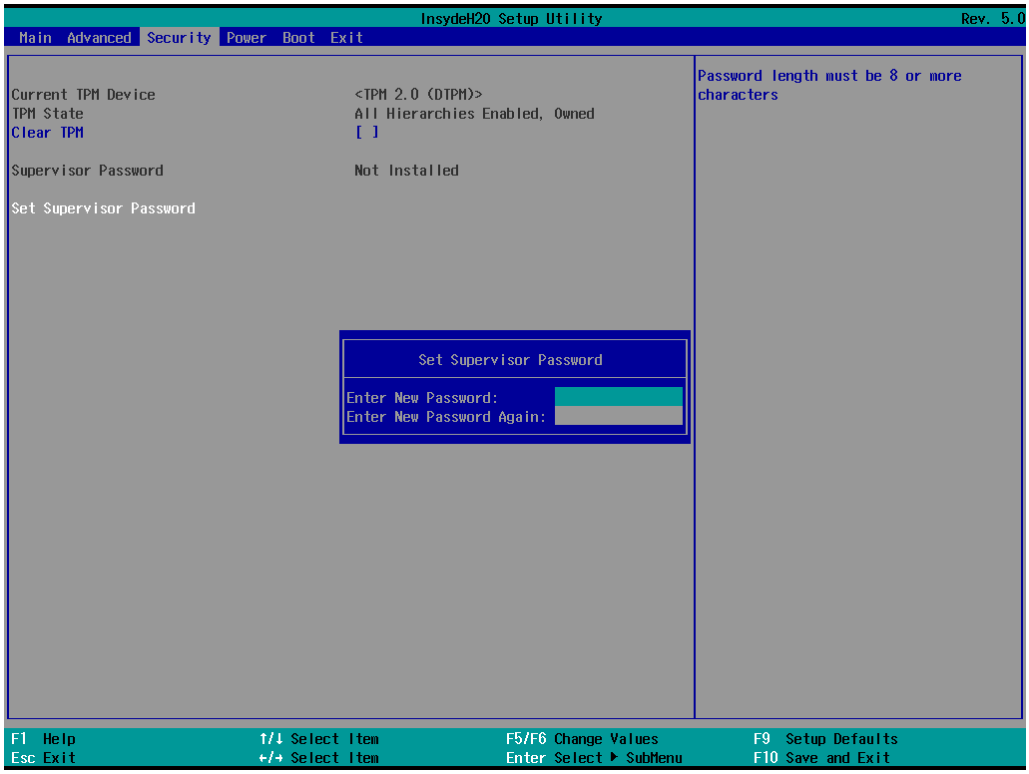

After setting the supervisor password, users can choose when the input password screen should be displayed.

Enable: System will ask for the password on post time

Disable: System will ask for the password to go to the setup utility

Config-Only: System will only ask for the password when you select the config (F2) option

Power Settings

This section allows users to configure power settings.

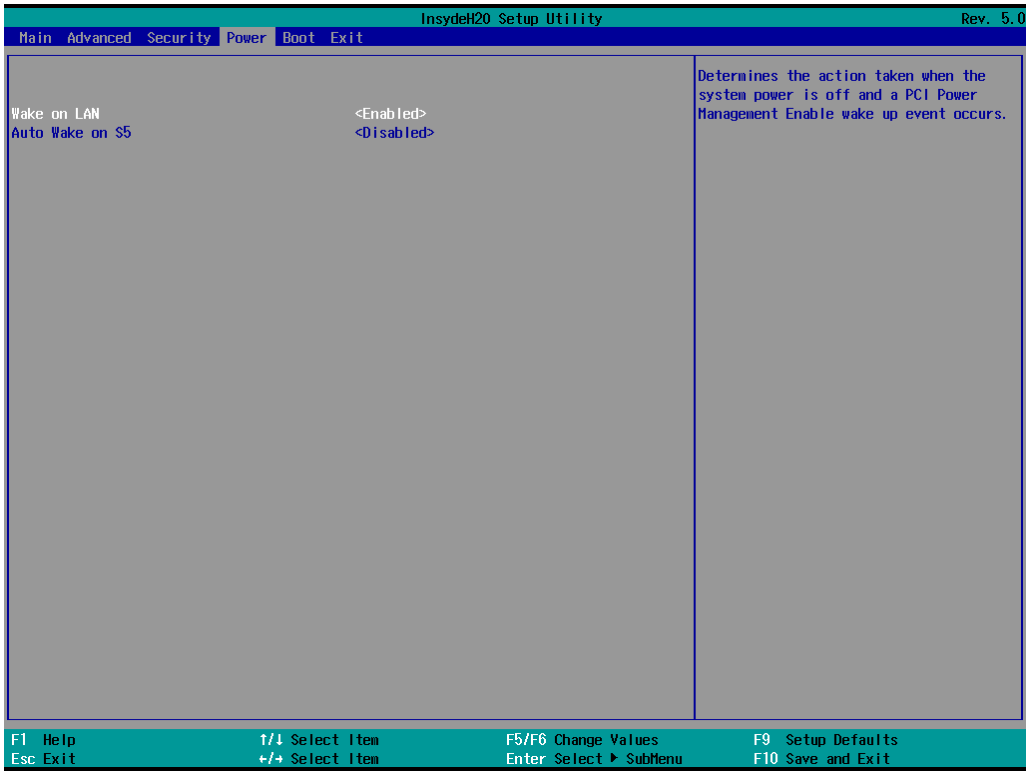

Wake on LAN

This feature is used to wake the system by a LAN device from a remote host.

Options: Enabled (default), Disabled

Auto Wake on S5

This item allows you to configure the panel PC to wake from S5 status. S5 stands for Soft Off, where the PSU remains engaged but power to all other parts of the system is cut. Auto-wake on S5 schedules a soft-reboot at certain periodic times that may be specified in the BIOS.

Options: Disabled (default); By Every Day (user specifies a regular daily time when the panel PC will power up); By Day of Month (user specifies a regular day each month when the panel PC will power up)

Boot Settings

This section allows users to configure boot settings.

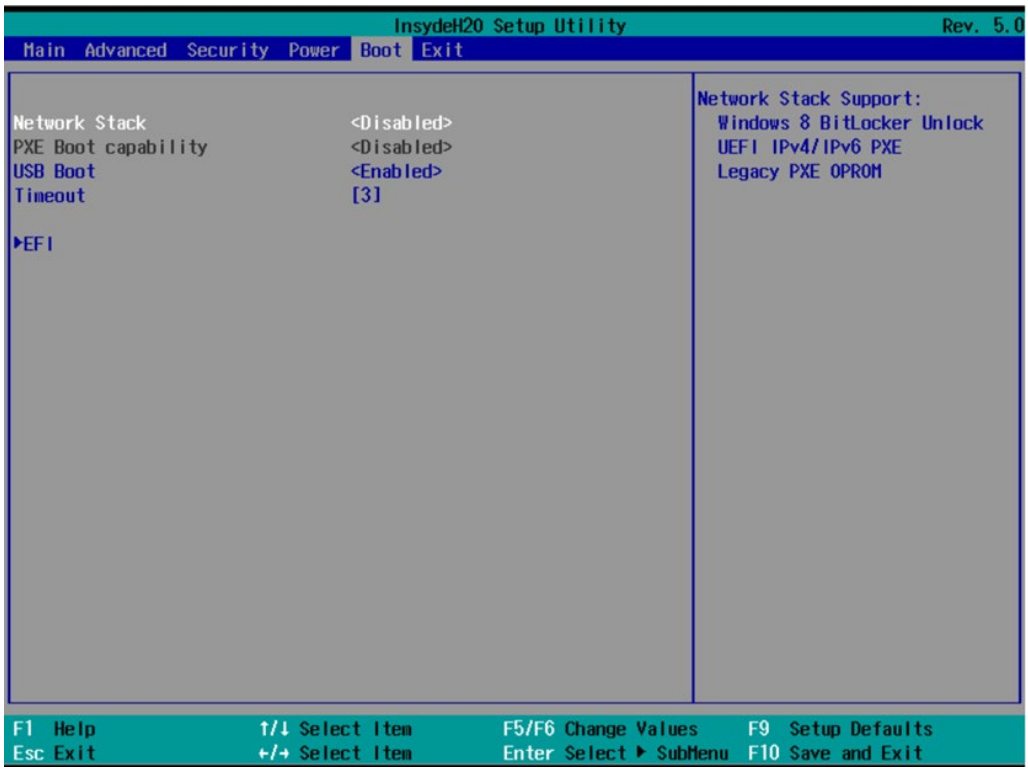

NOTE

If you do not add any storage, you will not see the EFI option.

Network Stack

It deploys an Internet Protocol (IP) stack. The IP stack provides an application library to open/close connections to remote devices and send/receive data between the remote devices.

Options: Disabled (default), Enabled

PXE Boot capability

This item will be shown only when you have enabled the Network Stack.

PXE Booting is booting a system over a network. This item allows users to start PXE over IPv4 or IPv6

Options: Disabled (default), UEFI: IPv4, UEFI: IPv6, UEFI: IPv4/IPv6

USB Boot

Set booting to USB boot devices capability.

Options: Enabled (Default), Disabled

Timeout

This item allows users to set the number of seconds that the firmware will wait before booting from the default boot selection.

EFI

This item allows users to select the boot order. Use F5 (move down) or F6 (move up) to change the boot order.

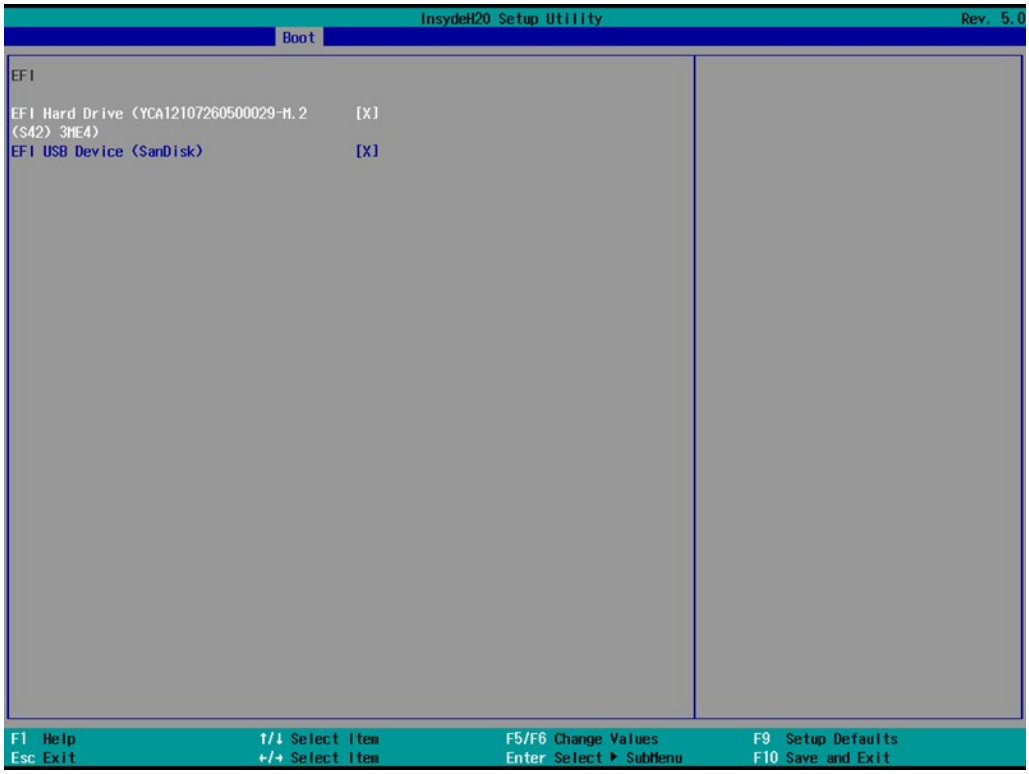

Exit Settings

The section allows users to exit the BIOS environment.

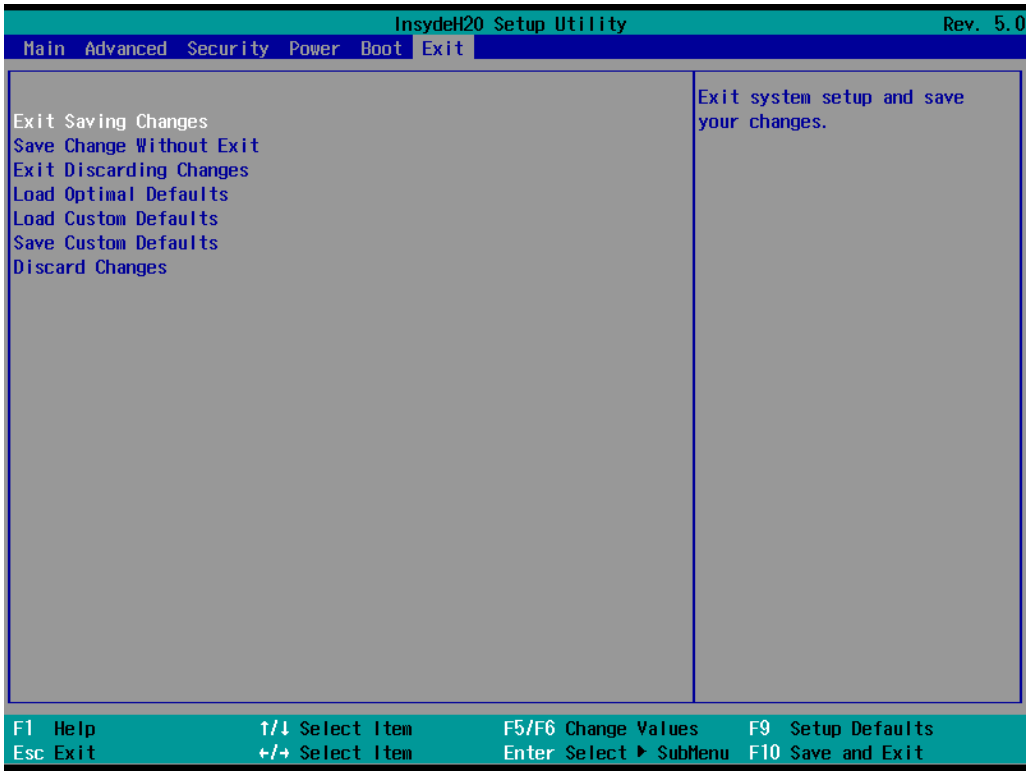

Exit Saving Changes

This item allows you to exit the BIOS environment and save the values you have just configured.

Options: Yes (default), No

Save Change Without Exit

This item allows you to save changes without exiting the BIOS environment.

Options: Yes (default), No

Exit Discarding Changes

This item allows you to exit without saving any changes that might have been made to the BIOS.

Options: Yes (default), No

Load Optimal Defaults

This item allows you to revert to the factory default BIOS values.

Options: Yes (default), No

Load Custom Defaults

This item allows you to load custom default values for the BIOS settings.

Options: Yes (default), No

Save Custom Defaults

This item allows you to save the current BIOS values as a "custom default" that may be reverted to at any time by the load custom defaults selection.

Options: Yes (default), No

Discard Changes

This item allows you to discard all settings you have just configured.

Options: Yes (default), No

Administering Secure Boot

Press F2 to go to the Administer Secure Boot.

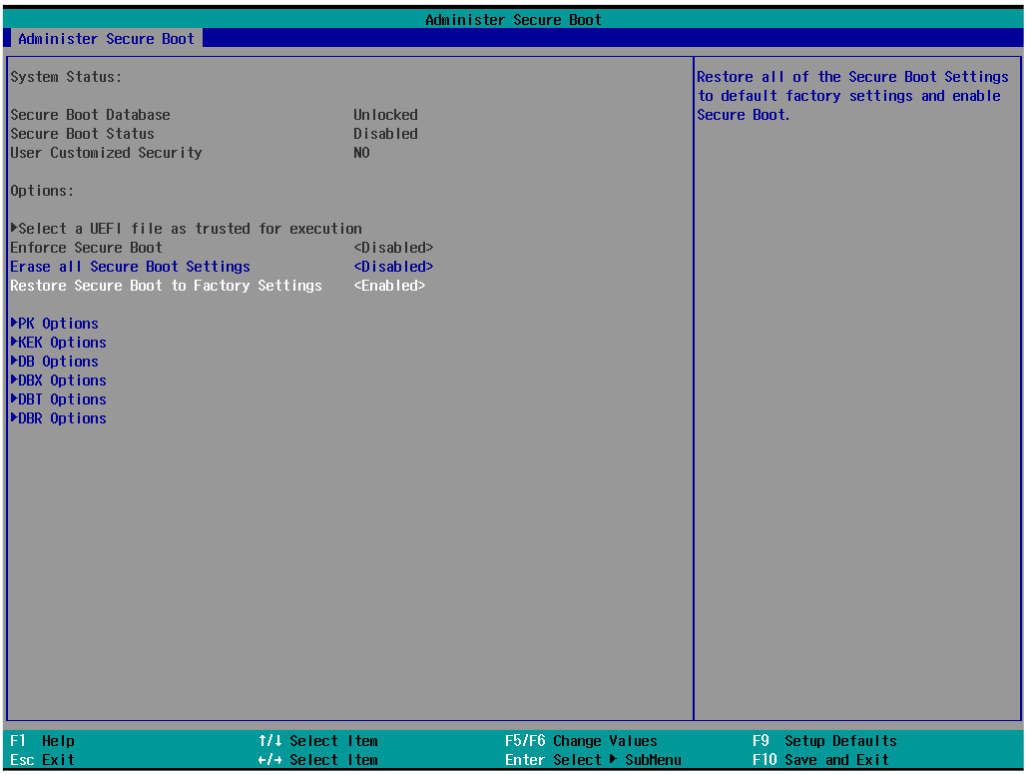

Secure Boot helps panel PCs resist attacks and infection from malware. The feature defines an interface between the operating system and BIOS. It detects tampering with boot loaders, key operation system files, and unauthorized option ROMs by validating their digital signatures.

Enabling UEFI Secure Boot

Set as "enabled" in "Restore Secure Boot to Factory Settings" under Administer Secure Boot menu. Press F10 as save and exist.

Moxa has included the Microsoft key in the BIOS by default. If you cannot boot up the panel PC using a non-Windows OS, use the following examples.

Enroll EFI Image

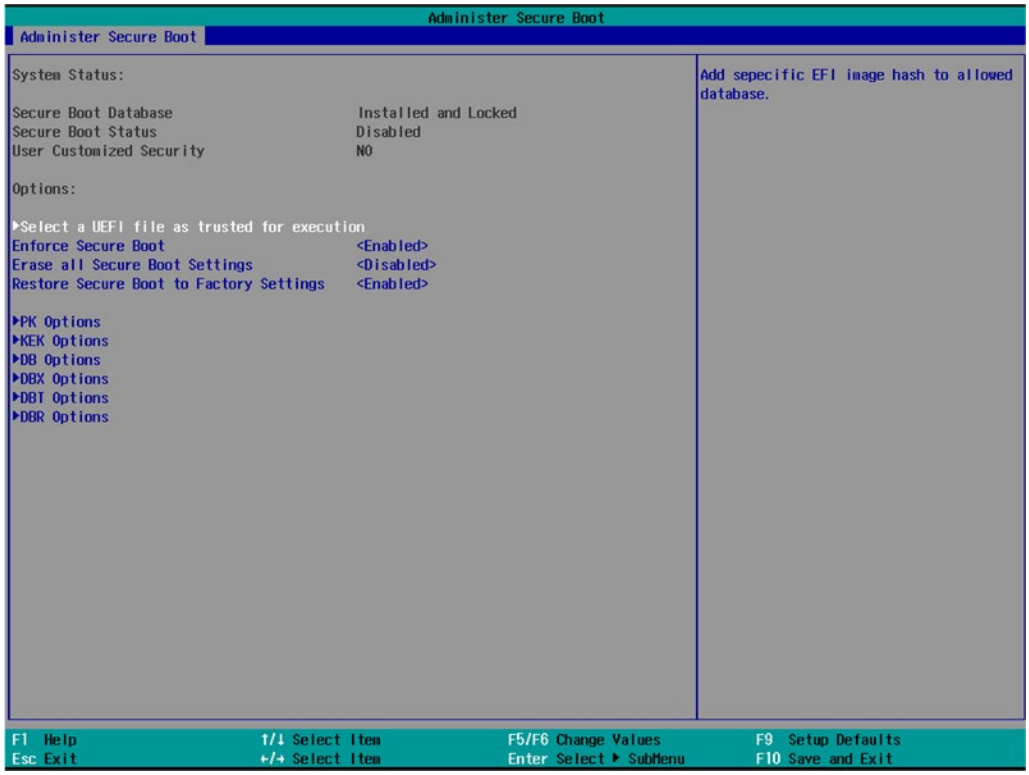

1. Enter **Administer Secure Boot** and select the option **Select a UEFI file as trusted for execution**.
2. Enter the loader name followed by the UEFI standard \EFI\BOOT\BOOT{machine type short-name}. E.g., efi\boot\BootX64.efi, Debian (EFI\debian\grubx64.efi), Suse (EFI\opensuse\grubx64.efi)

Enroll Customer Key

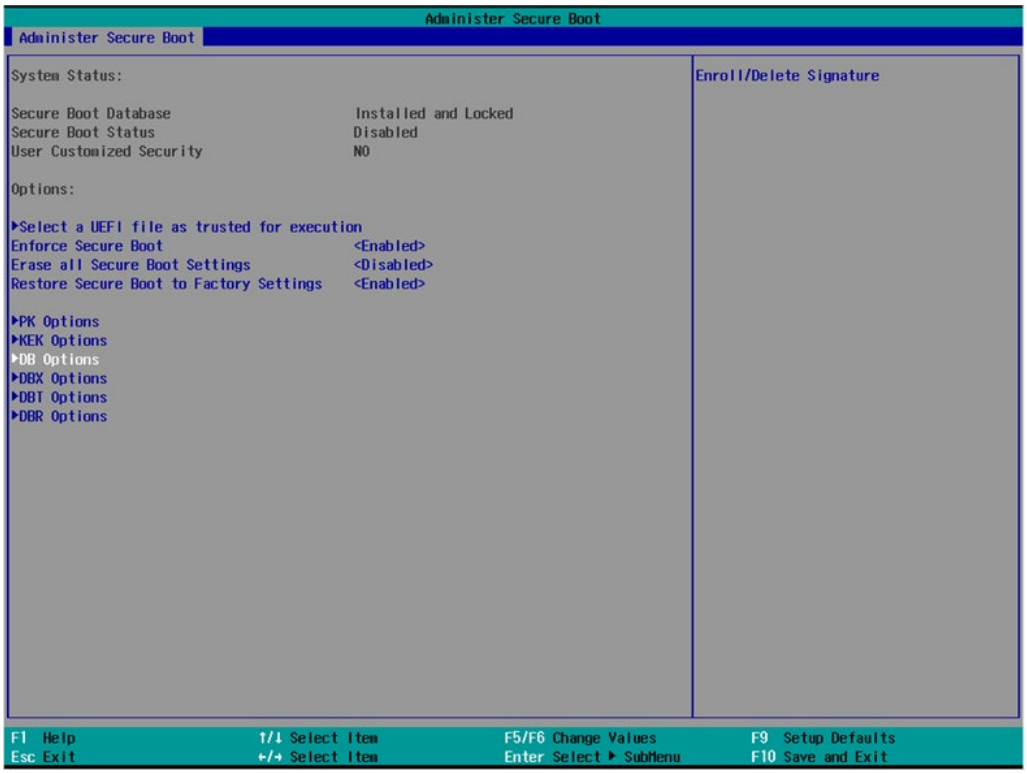

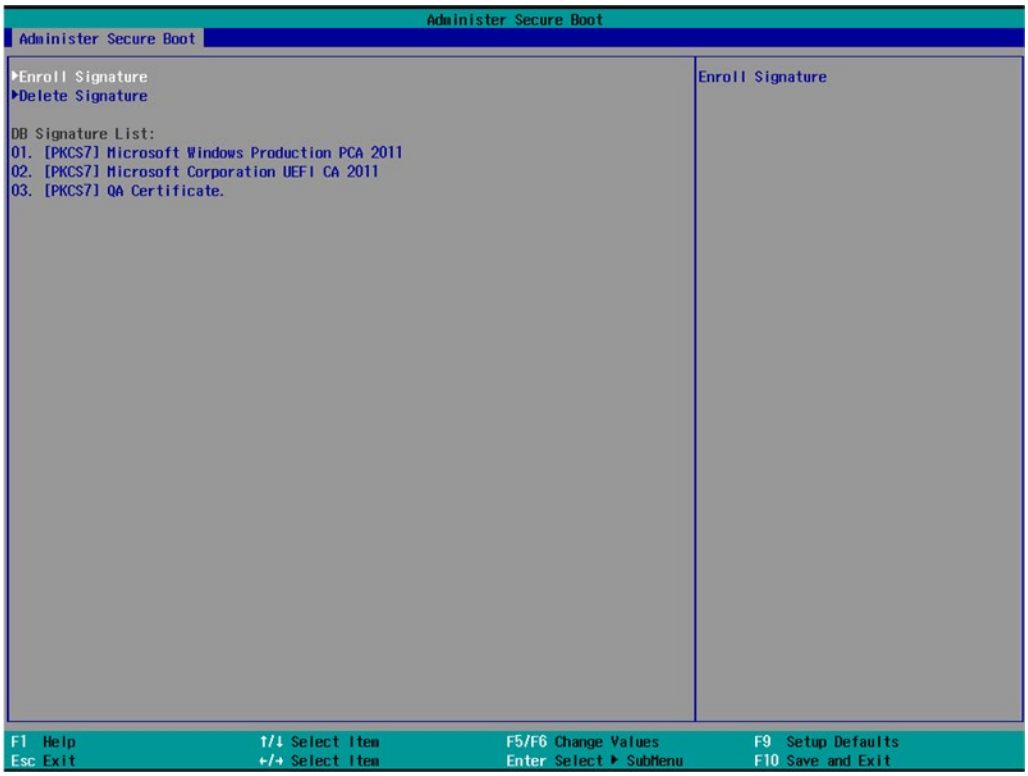

Enter "DB OPTION" and enroll your key. Please make sure your key is CRT format and uses RSA 2048 or better.

Upgrading the BIOS

This section describes how to upgrade the BIOS on your panel PC.

NOTE

It is possible to permanently damage the panel PC when upgrading the BIOS. We strongly recommend that you contact Moxa's technical support staff for assistance to obtain all the necessary tools and the most current advice before attempting to upgrade the BIOS on any Moxa device.

Step 1: Create a Bootable USB Disk

Before upgrading the BIOS, you must create a bootable USB drive as a system boot device for use in the future.

1. Insert a USB disk in the panel PC's USB drive.
2. Search for "format" and select **Create and format hard disk partitions**.

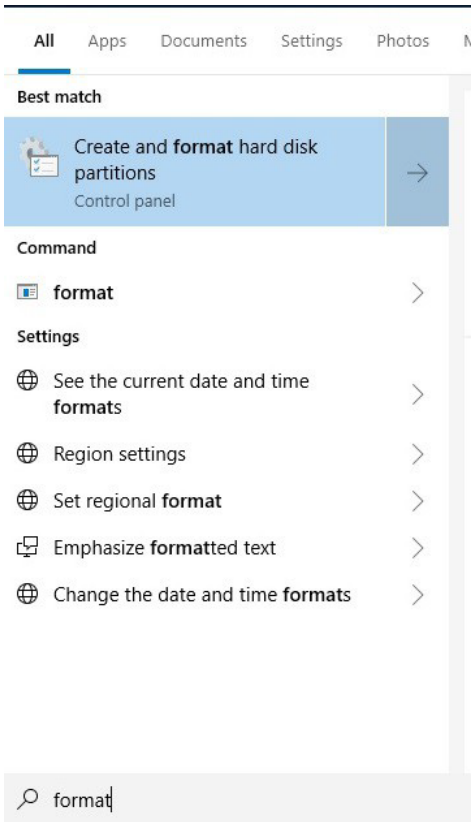

3. Right-click on the USB disk item and select **Format**.

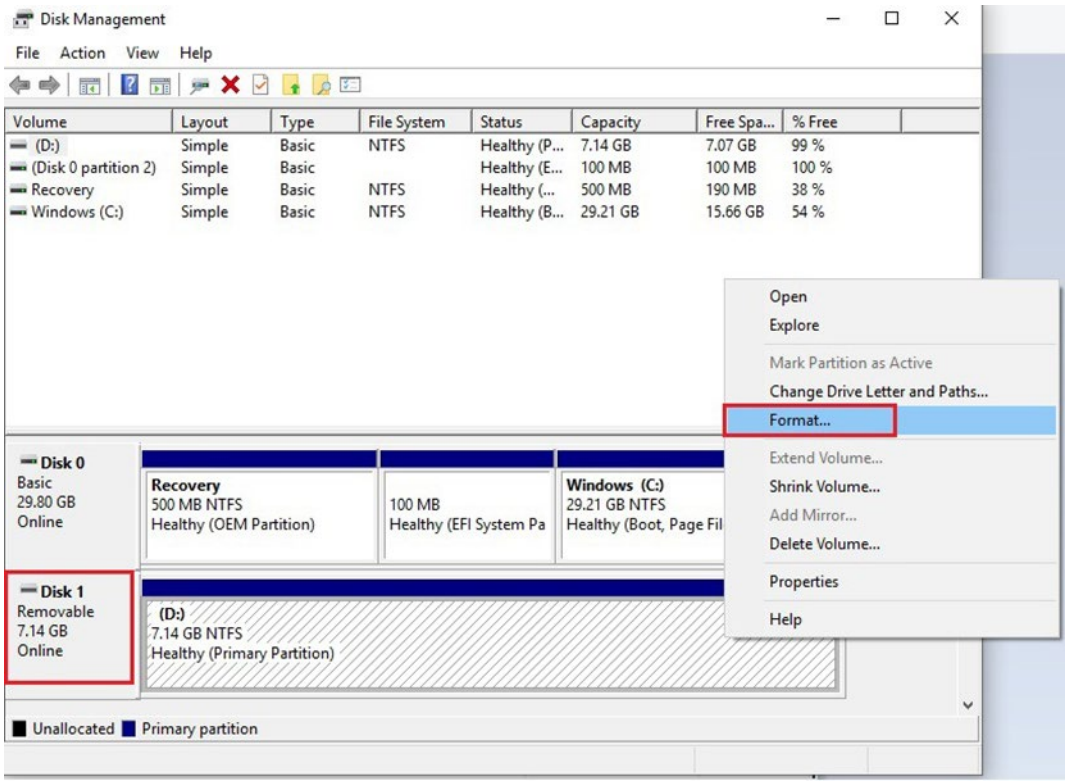

4. Select **FAT32** and click **OK** to start formatting the disk.

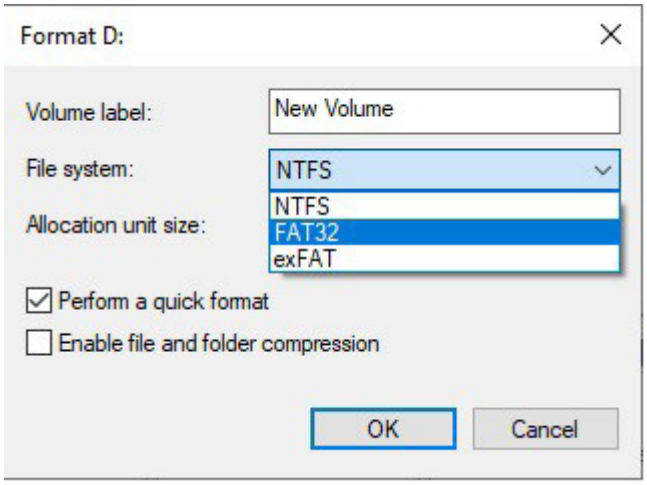

Step 2: Prepare the Upgrade File

You must use the BIOS upgrade installation file to upgrade the BIOS. Contact Moxa's technical department for assistance. The BIOS upgrade file includes an **efi** folder and an **xxxx.efi** file. Copy the **efi** folder and **xxxx.efi** file to the bootable USB disk.

Step 3: Run the Upgrade Program on Your Panel PC

1. Reboot the panel PC with the boot disk and press F2 to go to the Boot Manager.

   If the BIOS cannot recognize the USB drive as a boot-up device, the USB drive might not have a partition table. Use the Windows command line tool **diskpart** to rebuild the partition table.

2. Select the USB Disk.

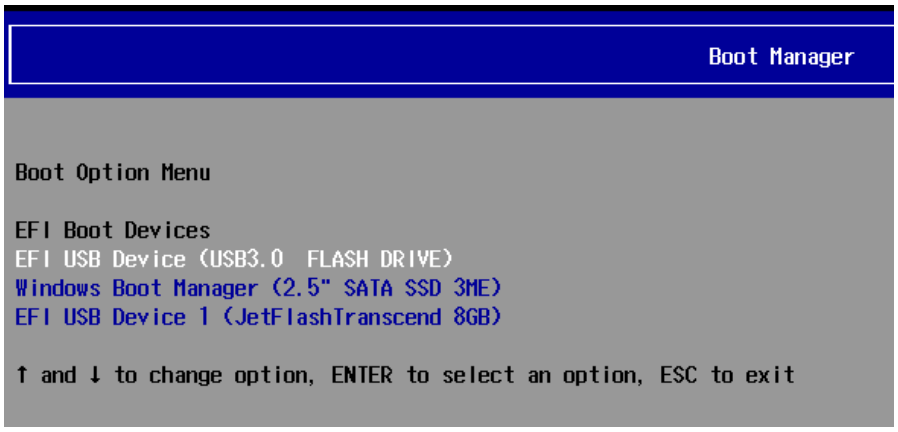

   The screen will switch to the SHELL environment.

3. Type **fs0:**, go to the directory where the upgrade file is located, and type **xxxxxx.efi** (the file name is based on the upgrade file from Moxa).

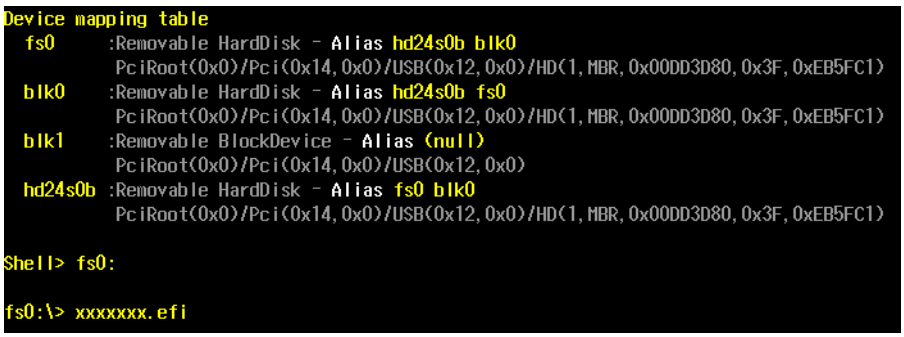

Wait until the upgrade procedure is completed.

ATTENTION

Do NOT switch off the power supply during the BIOS upgrade, since doing so may cause the system to crash.

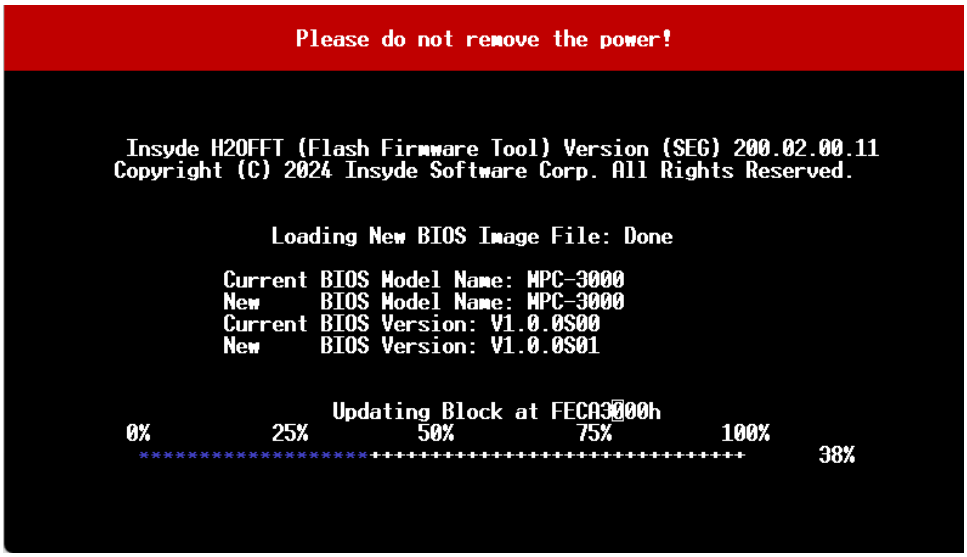

When the upgrade is completed, the panel PC will reboot automatically.

You can check the BIOS version on the Main page to confirm the upgrade.

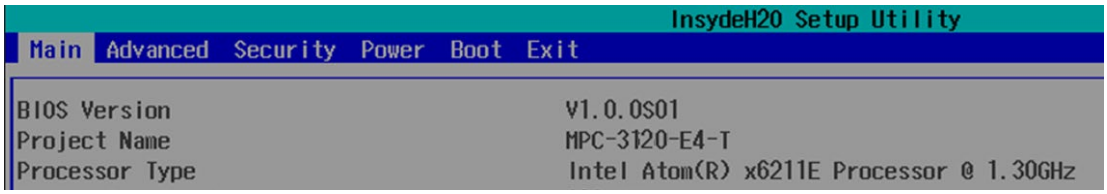

If the system has more than one boot device, you will see more than one fsx (x represents the number).

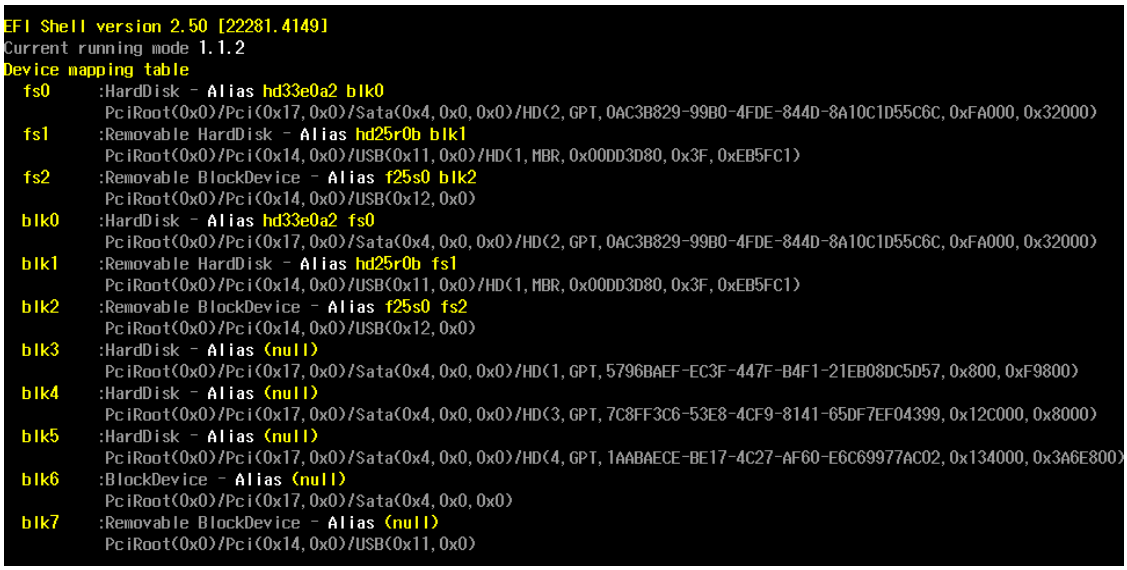

4. Go to each fsx (x stands for the number) and type ls to view the content of the boot device. If you find an upgrade file, run it.

```
fs0:\> fs1:

fs1:\> ls
Directory of: fs1:\

  06/27/19  11:43a <DIR>          16,384  efi
  06/13/19  11:10a           17,974,704  820C100S16.efi
          1 File(s)  17,974,704 bytes
          1 Dir(s)
```

A. Regulatory Approval Statement

This device complies with part 15 of the FCC Rules. Operation is subject to the following two conditions: (1) This device may not cause harmful interference, and (2) this device must accept any interference received, including interference that may cause undesired operation.

Class A: FCC Warning! This equipment has been tested and found to comply with the limits for a Class A digital device, pursuant to part 15 of the FCC Rules. These limits are designed to provide reasonable protection against harmful interference when the equipment is operated in a commercial environment. This equipment generates, uses, and can radiate radio frequency energy and, if not installed and used in accordance with the instruction manual, may cause harmful interference to radio communications. Operation of this equipment in a residential area is likely to cause harmful interference in which case the user will be required to correct the interference at his or her own expense.

European Community

Warning:
This is a class A product. If used in a domestic environment, this product may cause undesirable radio interference, in which case the user may be required to take adequate measures to prevent the interference from affecting nearby devices.